Tolomatic™
EXCELLENCE IN MOTION

Parts Sheet

2171-4012_01

RSX Extreme Force Electric Linear Actuator

Sizes: 10, 15, 20, 25, 50

LMI; RSX10, 15, 20 SIZES

* = YMH VARIABLE PART

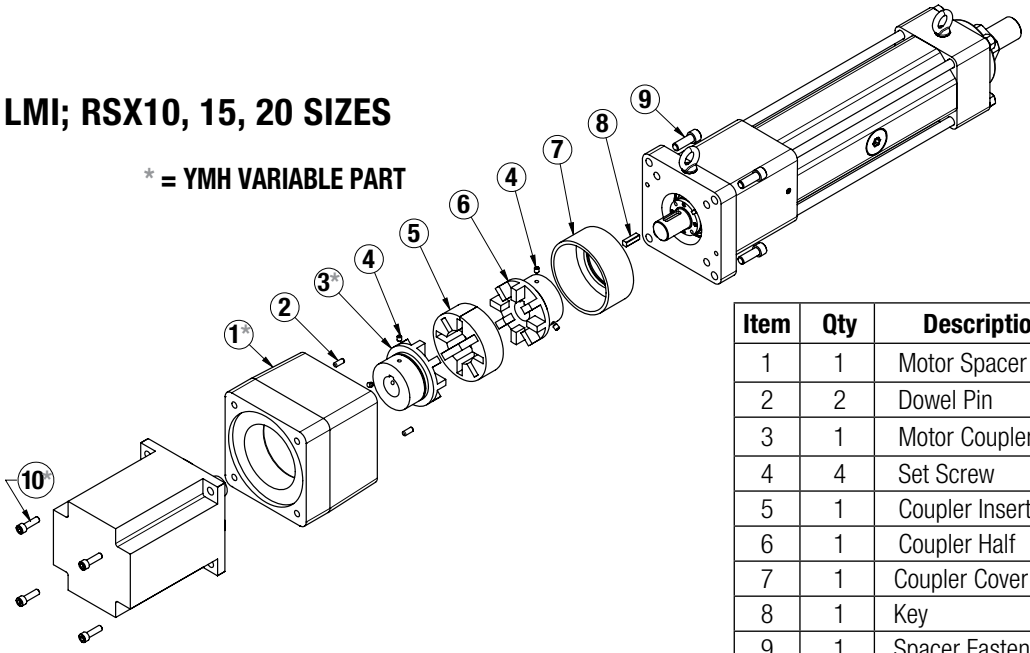

Clicking on part number will open tolomatic.com/cart and add quantity of 1 to cart. Change quantity as needed. CLICK ON BROWSER'S BACK BUTTON TO RETURN TO PARTS SHEET.

Click on Part No. to Add to Cart

Item	Qty	Description	RSX10, 15	RSX20
1	1	Motor Spacer	*	*
2	2	Dowel Pin	2750-1184	2750-1184
3	1	Motor Coupler Half	*	*
4	4	Set Screw	1310-1014	1310-1014
5	1	Coupler Insert	2171-1035	2171-1035
6	1	Coupler Half	2171-1032	2173-1032
7	1	Coupler Cover	2171-1103	2171-1103
8	1	Key	2171-1103	2173–1103
9	1	Spacer Fasteners	2171-1111	2173–1302
10	4	Motor Fasteners	*	*

*YMH Variable Parts

LMI; RSX25 SIZE

* = YMH VARIABLE PART

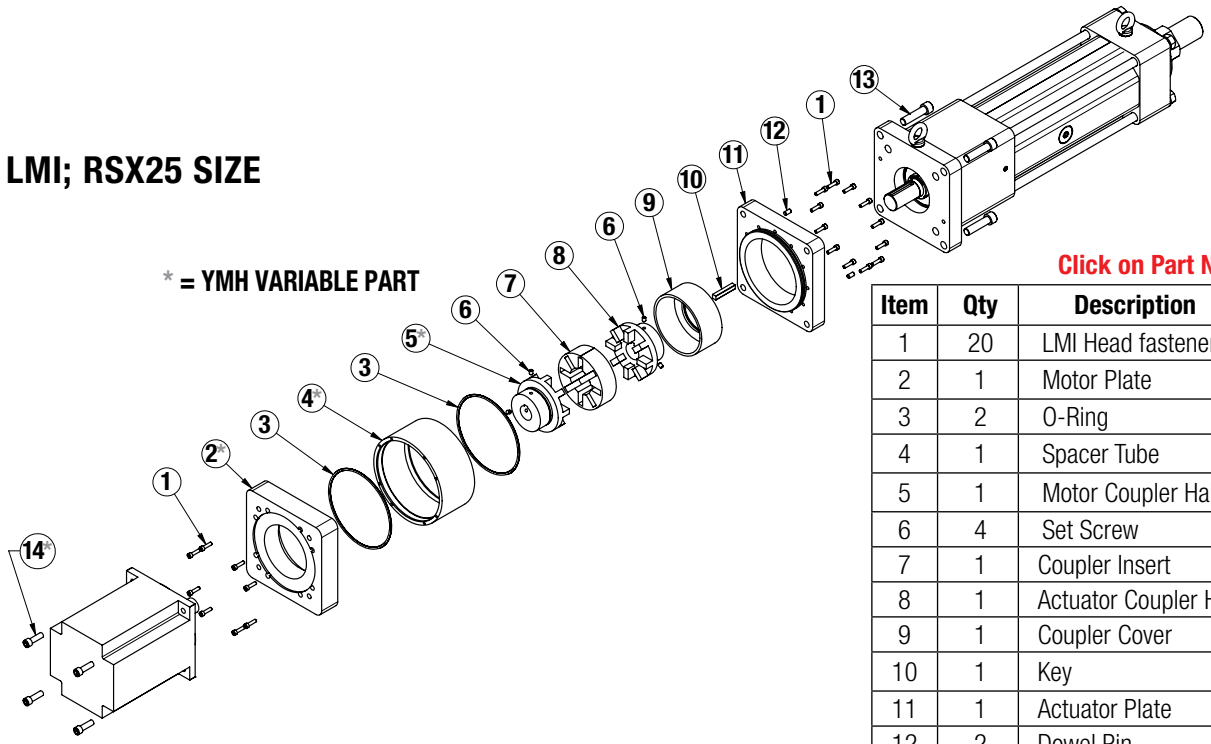

Click on Part No. to Add to Cart

Item	Qty	Description	RSX25
1	20	LMI Head fastener	2172-1056
2	1	Motor Plate	*
3	2	O-Ring	2172-1063
4	1	Spacer Tube	*
5	1	Motor Coupler Half	*
6	4	Set Screw	2172-1014
7	1	Coupler Insert	2172-1035
8	1	Actuator Coupler Half	2172-1032
9	1	Coupler Cover	2172-1036
10	1	Key	2172-1103
11	1	Actuator Plate	2172-1066
12	2	Dowel Pin	4420-1004
13	4	LMI fastener	2172-1111
14	4	Motor Fasteners	*

*YMH Variable Parts

See RSX Manual for instructions.

See RSX Manual for instructions.

LMI; RSX50 SIZE

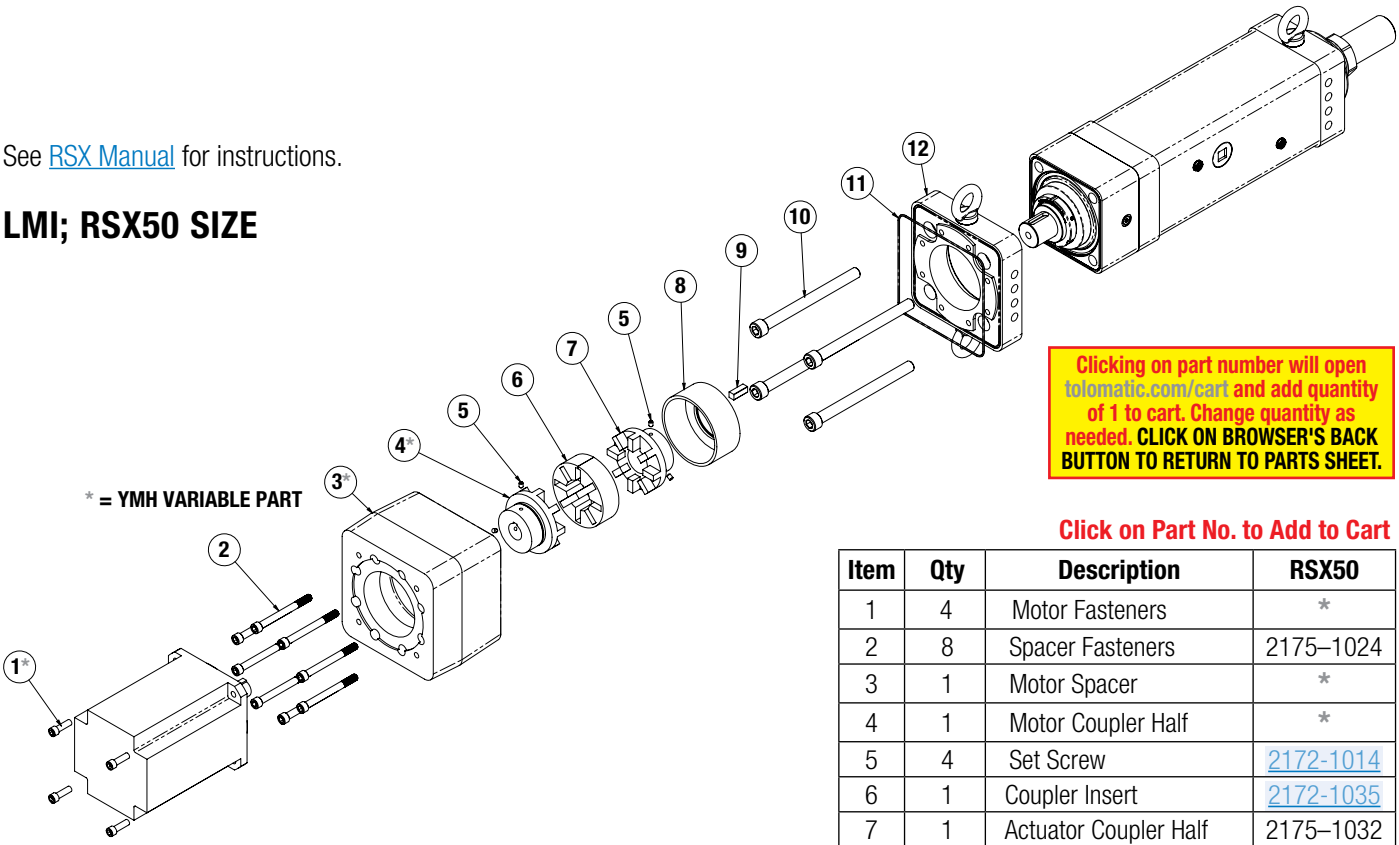

Clicking on part number will open tolomatic.com/cart and add quantity of 1 to cart. Change quantity as needed. CLICK ON BROWSER'S BACK BUTTON TO RETURN TO PARTS SHEET.

Click on Part No. to Add to Cart

Item	Qty	Description	RSX50
1	4	Motor Fasteners	*
2	8	Spacer Fasteners	2175–1024
3	1	Motor Spacer	*
4	1	Motor Coupler Half	*
5	4	Set Screw	2172-1014
6	1	Coupler Insert	2172-1035
7	1	Actuator Coupler Half	2175–1032
8	1	Coupler Cover	2172-1036
9	1	Key	2175–1018
10	4	Adapter Plate Fasteners	2175–1082
11	1	O-Ring	2175–1025
12	1	Adapter Plate	2175–1550

*YMH Variable Parts

See RSX Manual for instructions.

RP; RSX10, 15, 20, 25 SIZES

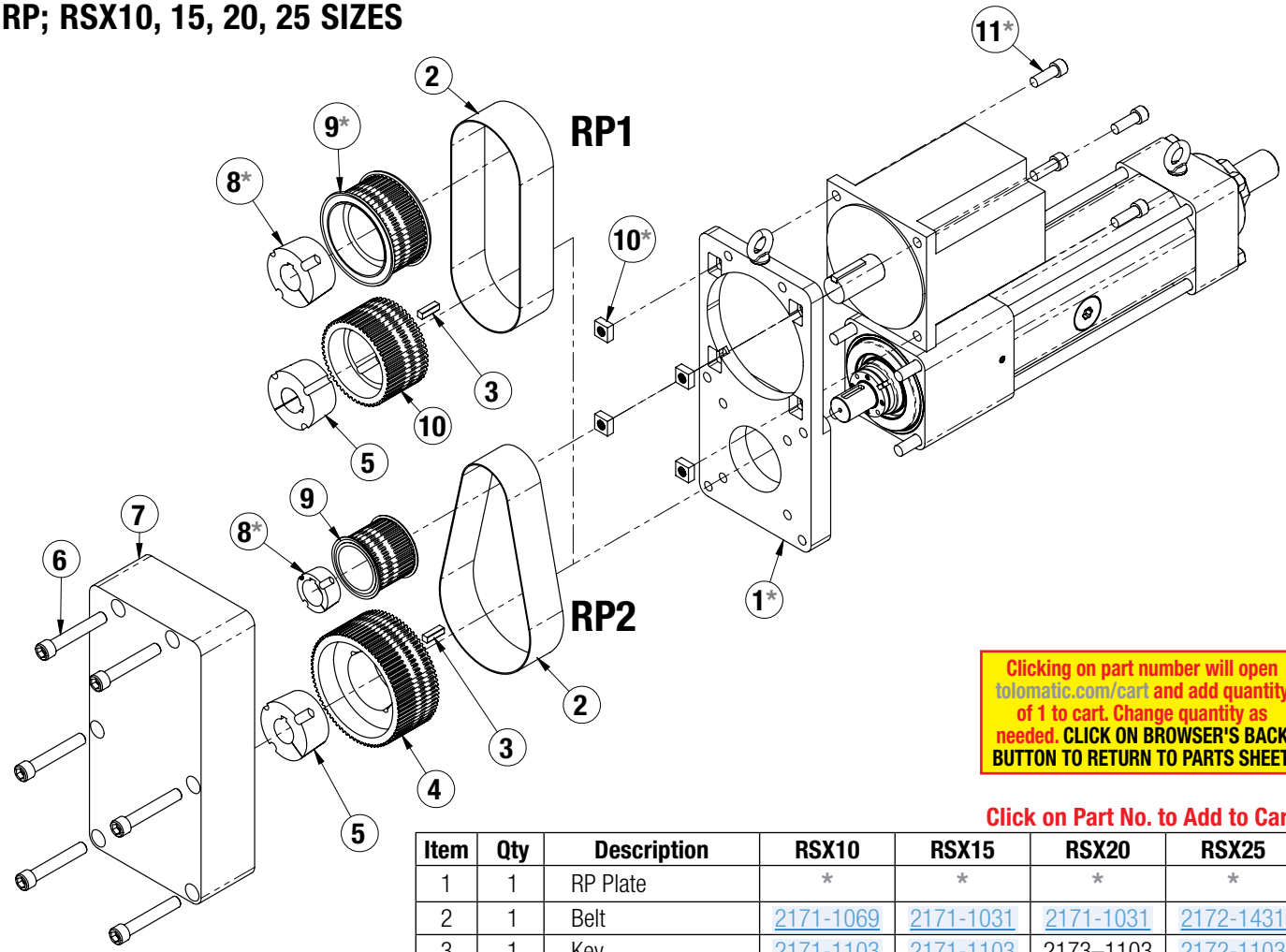

Clicking on part number will open tolomatic.com/cart and add quantity of 1 to cart. Change quantity as needed. CLICK ON BROWSER'S BACK BUTTON TO RETURN TO PARTS SHEET.

Click on Part No. to Add to Cart

Item	Qty	Description	RSX10	RSX15	RSX20	RSX25
1	1	RP Plate	*	*	*	*
2	1	Belt	2171-1069	2171-1031	2171-1031	2172-1431
3	1	Key	2171-1103	2171-1103	2173–1103	2172-1103
4	1	Actuator Pulley, RP1	2171-1426	2171-1426	2171-1426	2172-1026
		Actuator Pulley, RP2	2171-1425	2171-1425	2171-1425	2172-1025
5	1	Actuator Taperlock	2171-1434	2171-1434	2173–1434	2172-1268
6	1	RP Cover Fastener	2171–1087	2171–1087	2171–1087	2172-1087
7	1	RP Cover	2171-1346	2171-1346	2171-1346	2172-1446
8	1	Motor Taperlock	*	*	*	*
9	1	Motor Pulley, RP1	2171–1430	2171–1428	2171–1428	2172-1130
		Motor Pulley, RP2	2171–1429	2171-1427	2171-1427	2172–1129
10	4	Square Nuts	*	*	*	*
11	4	Motor Fasteners	*	*	*	*

*YMH Variable Parts

See RSX Manual for instructions.

RP; RSX50 SIZE

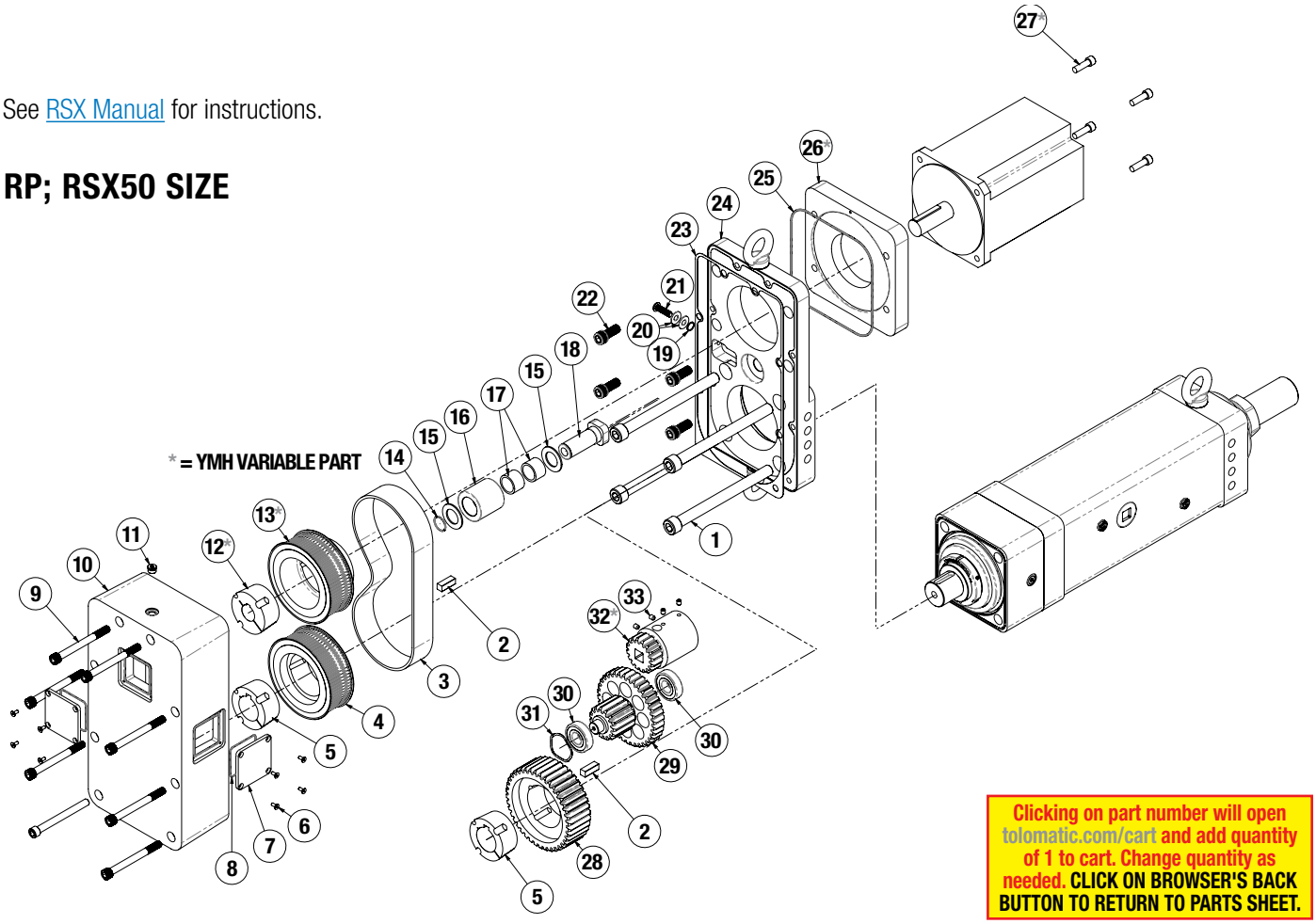

Clicking on part number will open tolomatic.com/cart and add quantity of 1 to cart. Change quantity as needed. CLICK ON BROWSER'S BACK BUTTON TO RETURN TO PARTS SHEET.

	Quantity		Click on Part No. to Add to Cart	
Item	RP1	RP4 & RP6	Description	RSX50
1	4	4	RP Plate Fasteners	2175–1082
2	1	1	Key	2175–1018
3	1	-	Belt	2175–1031
4	1	-	Actuator Pulley	2175–1428
5	1	1	Actuator Taperlock	2175–1472
6	8	8	Access Cover Fasteners	0515-1228
7	2	2	Access Cover	2175–1447
8	2	2	Acces Cover O-Ring	1150-1175
9	8	8	RP Cover Fasteners	2175–1467
10	1	1	RP Cover	2175–1346
11	1	1	Plug	2175–1083
12	1	-	Motor Taperlock	*
13	1	-	Motor Pulley	*
14	1	-	Retaining Ring	0910-1023
15	2	-	Thrust Bearing	2175–1453
16	1	-	Tensioner	2175–1449
17	2	-	Roller Bearing	2175–1451
18	1	-	Tensioner Shaft	2175–1450

	Quantity		Click on Part No. to Add to Cart	
Item	RP1	RP4 & RP6	Description	RSX50
19	1	1	O-Ring	1001-1130
20	2	2	Washer	2175–1470
21	1	1	Tensioner Adj Fastener	2175–1469
22	4	4	Motor Plate Fastener	2175–1466
23	1	1	RP Gasket	2175–1473
24	1	1	RP Plate	2175–1445
25	1	1	Motor Plate O-Ring	2175–1465
26	1	1	Motor Plate	*
27	4	4	Motor Fasteners	*
28	-	1	Actuator Gear	2175–1458
29	-	1	Compound Gear	2175–1456
30	-	2	Compound Gear Bearing	2175–1455
31	-	1	Wave Spring	2750–1050
32	-	1	Motor Gear	*
33	-	4	Set Screw	2175–1478

*YMH Variable Parts

RSX SEAL CARTRIDGE; RSX10, 15, 20, 25 SIZES

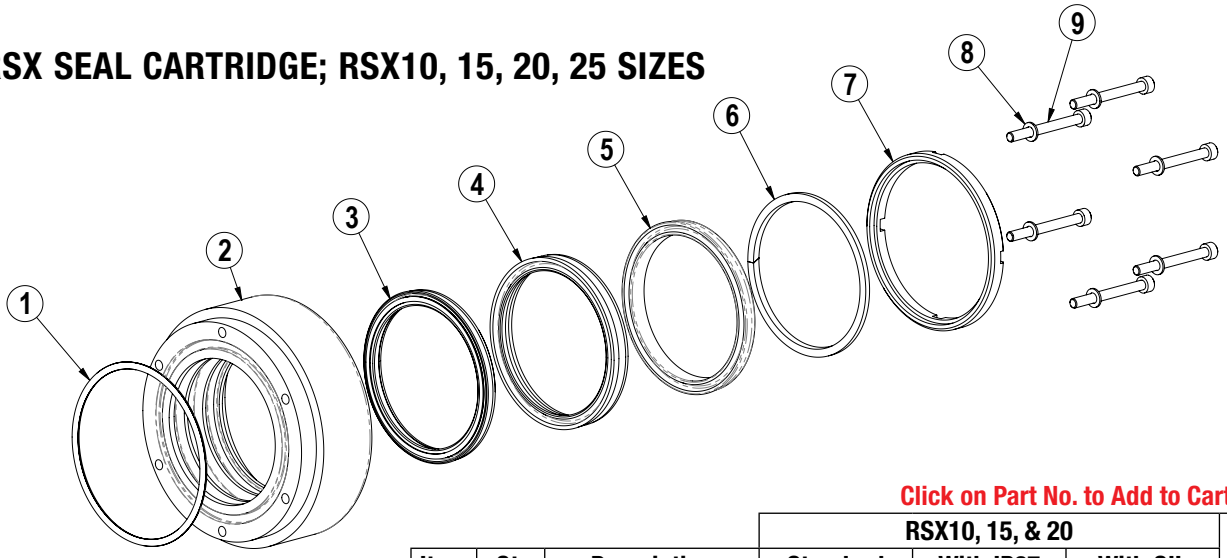

See RSX Manual for instructions.

Click on Part No. to Add to Cart

Item	Qty	Description	RSX10, 15, & 20 Standard	RSX10, 15, & 20 With IP67	RSX10, 15, & 20 With OIL	RSX25
SC	1	Seal Cartridge Kit	2173–9002	2171-9002	2171-9612	2172-9002
1	1	O-Ring	2171–1007	2171–1007	0778-1008	2172–1007
2	1	Cartridge	2171–1002	2171–1002	2171–1622	2172–1002
3	1	U-cup, Secondary	-	-	2171–1604	-
4	1	U-Cup, Primary	-	2171–1004	2171–1605	2172–1004
5	1	Wiper	2171–1005	2171–1005	2171–1606	2172–1005
6	1	Scraper	–	2171–1006	2171–1006	2172–1006
7	1	Scraper Retainer	–	2171–1003	2171–1003	2172–1003
8	6	Washer	1150-1466	1150-1466	1150-1466	2733-1289
9	6	Cartridge Fastener	0601-1144	0601-1144	2212-1095	1150–1199

RSX SEAL CARTRIDGE; RSX50 SIZE

Clicking on part number will open tolomatic.com/cart and add quantity of 1 to cart. Change quantity as needed. CLICK ON BROWSER'S BACK BUTTON TO RETURN TO PARTS SHEET.

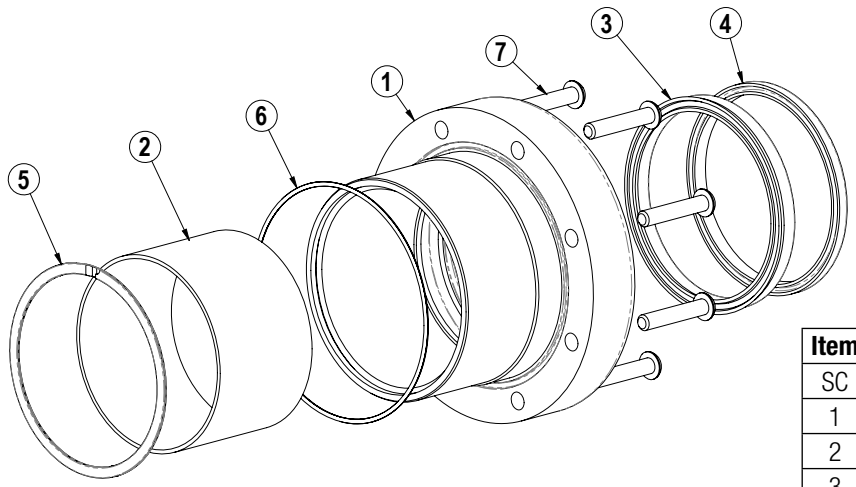

Click on Part No. to Add to Cart

Item	Qty	Description	RSX50
SC	1	Seal Cartridge Kit	2175–9002
1	1	Cartridge	2175–1002
2	1	Rod Bushing	2175–1009
3	1	U-Cup	2175–1004
4	1	Wiper	2175–1005
5	1	Retention Ring	2175–1008
6	1	O-Ring	2171–1008
7	8	Cartridge Fastener	2175–1084

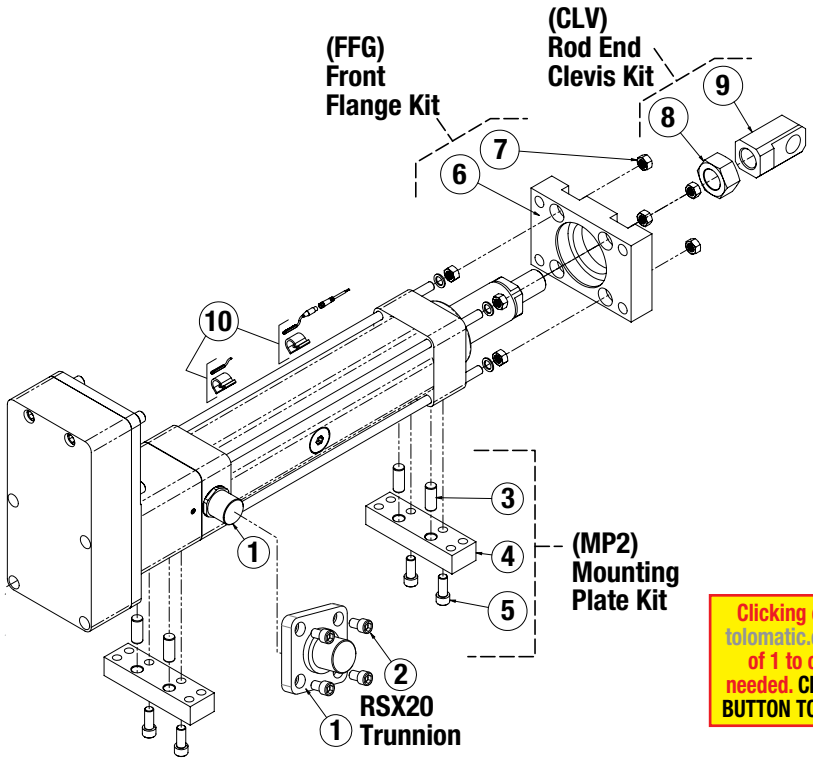

Clicking on part number will open tolomatic.com/cart and add quantity of 1 to cart. Change quantity as needed. CLICK ON BROWSER'S BACK BUTTON TO RETURN TO PARTS SHEET.

Click on Part No. to Add to Cart

Item or Code	Qty	Description	RSX10,15	RSX20	RSX25	RSX50
1	2	Trunnion	2171-9009	2173–1085	2170-1085	-
2	8	Trunnion Fastener	-	2173–1038	-	-
MP2	2	Mounting Plate Kit	2171-9017	2173–9017	2172-9017	-
3	4	Dowel Pin	2171-1110	2171-1110	2171-1110	-
4	2	Mounting Plate	2171-1109	2173-1109	2172-1109	-
5	4	Mounting Plate Fastener	2171-1088	2172-1088	2172-1088	-
FFG	1	Front Flange Kit	2171–1062	2173–1062	2172–1062	-
6	1	Front Flange	2171–1062	2173–1261	2172-1062	-
7	4	Nut	2171-1047	2172-1047	2172-1047	-
CLV	1	Rod End Clevis Kit	2171-9013	2172-9013	2172-9013	2175–9013
8	1	Clevis Nut	2171-1114	2172-1114	2172-1114	2175–1114
9	1	Clevis	2171-1113	2172-1113	2172-1113	2175–1113

ITEM	Config. Code	DESCRIPTION
SWITCHES WITH QUICK-DISCONNECT COUPLERS		
10	SWRSX_ _RK	Reed Switch, SPST Normally Open
	SWRSX_ _NK	Reed Switch, SPST Normally Closed
	SWRSX_ _TK	Solid State Switch, PNP (Sourcing) Normally Open
	SWRSX_ _KK	Solid State Switch, NPN (Sinking) Normally Open
	SWRSX_ _PK	Solid State Switch, PNP (Sourcing) Normally Closed
	SWRSX_ _HK	Solid State Switch, NPN (Sinking) Normally Closed
NOTE: Includes retained hardware & female connector for quick-disconnect		

ITEM	Config. Code	DESCRIPTION
SWITCHES WITHOUT QUICK-DISCONNECT COUPLERS		
10	SWRSX_ _RY	Reed Switch, SPST Normally Open
	SWRSX_ _NY	Reed Switch, SPST Normally Closed
	SWRSX_ _TY	Solid State Switch, PNP (Sourcing) Normally Open
	SWRSX_ _KY	Solid State Switch, NPN (Sinking) Normally Open
	SWRSX_ _PY	Solid State Switch, PNP (Sourcing) Normally Closed
	SWRSX_ _HY	Solid State Switch, NPN (Sinking) Normally Closed

To order switch kits use configuration code for switch preceded by SW and actuator code.

EXAMPLE: S W R S X 1 5 K K 3

KIT | ACTUATOR | SIZE | SWITCH CODE | QUANTITY

The example is for 3 Solid State NPN, Normally Open Switches with Quick-disconnect couplers. Each switch is complete with Bracket, Set Screw, Switch and mating QD cable. Note that the bracket/switch size is common and may be used on any size RSX.

SWITCH WIRING DIAGRAMS AND LABEL COLOR CODING (CE and RoHS Compliant)

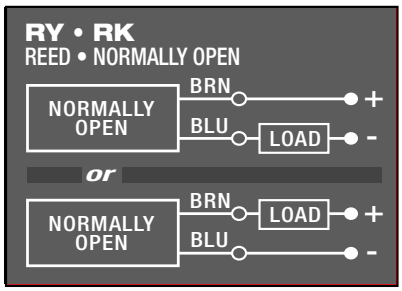

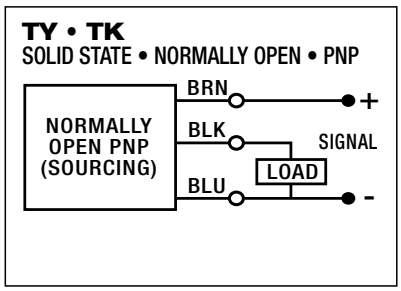

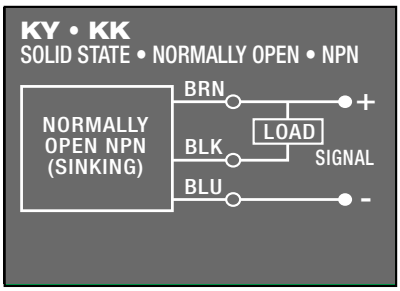

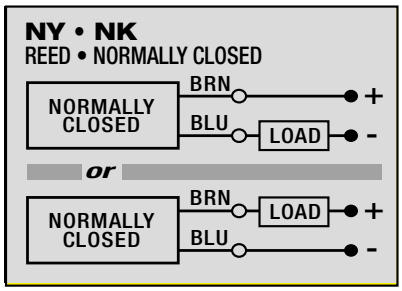

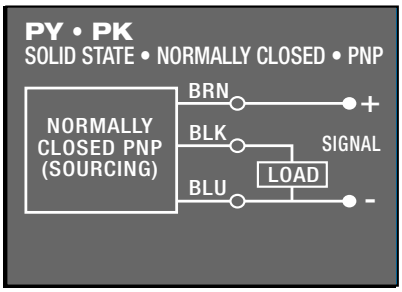

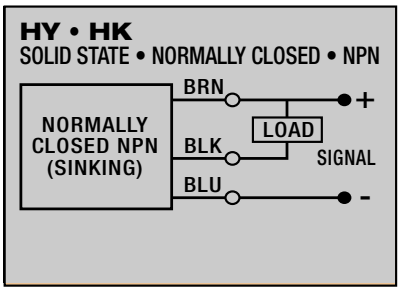

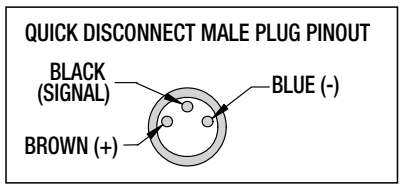

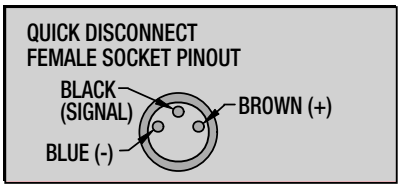

SWITCH DETECTION POINT

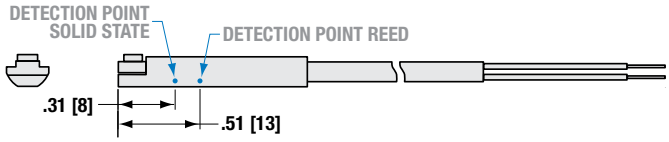

Dimensions in inches [brackets indicate dimensions in millimeters]

SWITCH INSTALLATION: RSX10, 15, 20, & 25

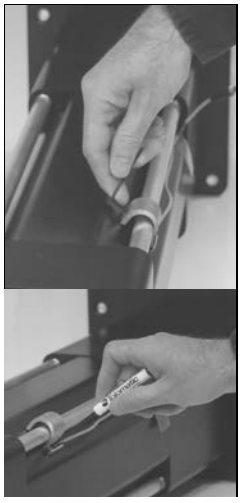

Place switch bracket onto any one of the four tie rods that run the length of the extruded tube. Insert the switch with set screw and the word "Tolomatic" facing up and slide into the mating slot on the bracket. Position the bracket with the switch to the exact location desired, with the bracket tight to the surface of the extrusion, then lock the bracket securely into place by tightening the set screw with an Allen wrench. Then tighten the switch into the bracket with a small slotted screwdriver.

SWITCH INSTALLATION: RSX50

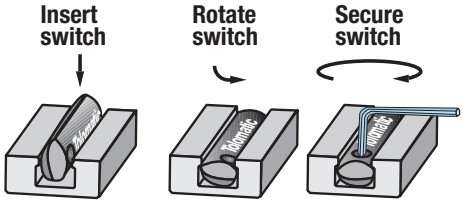

Place switch in the groove on tube at desired location with "Tolomatic" facing outward. While applying light pressure to the switch, rotate the switch is halfway into the groove. Maintaining light pressure, rotate the switch in the opposite direction until it is fully inside the groove with "Tolomatic" visible. Re-position the switch to the exact location and lock the switch securely into place by tightening the screw on the switch.

Tolomatic™
EXCELLENCE IN MOTION
COMPANY WITH QUALITY SYSTEM CERTIFIED BY DNV = ISO 9001 =
3800 County Road 116, Hamel, MN 55340 USA
https://www.Tolomatic.com • Email: Help@Tolomatic.com
Phone: (763) 478-8000 • Toll Free: 1-800-328-2174

All brand and product names are trademarks or registered trademarks of their respective owners. Information in this document is believed accurate at time of publication. However, Tolomatic assumes no responsibility for its use or for any errors that may appear in this document. Tolomatic reserves the right to change the design or operation of the equipment described herein and any associated motion products without notice. Information in this document is subject to change without notice.

© 2026 Tolomatic 202611251044