Tolomatic™
EXCELLENCE *IN MOTION*

MXB RODLESS BELT DRIVE ACTUATORS

ENDURANCE TECHNOLOGY℠
A Tolomatic Design Principle

Ⓤ UNGUIDED
Ⓢ SOLID BEARING
Ⓟ PROFILED RAIL



LINEAR SOLUTIONS MADE EASY

MXB Rodless Belt Drive Actuators

DESIGNED TO OUTLAST EVERY BELT DRIVE ACTUATOR ON THE MARKET



The MXB belt drive electric actuator is exactly what you would expect from the industry's number one rodless supplier. Designed with our exclusive **ENDURANCE TECHNOLOGY**SM features, the MXB delivers superior performance to meet the most demanding applications. Nobody knows rodless like Tolomatic, and the MXB proves it.

- MXB-[U], MXB-[S] & MXB-[P]: Low profile to fit your application
- MXB-[S]: Engineered bearing material in trapezoidal shape for less wear, low static & dynamic friction
- MXB-[P]: High precision bearings feature smooth, low breakaway motion
- MXB-[P]: Durable profiled rail design uses recirculating ball technology to reduce friction and extend actuator life.
- MXB-[P]: High load and bending moment capacities

A Comparison of Belt Drive Actuators

	B3W	MXB-U	MXB-S	MXB-P
	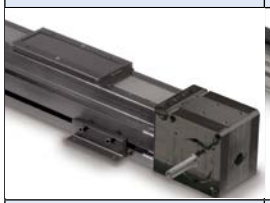			
Features:	High load and bending moment capacities	Basic thrust, requires external guidance and support	Medium load and bending moment capacities	High load and bending moment capacities
Load up to: *(with options)*	35.6 kN [8,000 lbf]	NA	4.6 kN [1,040 lbf]	11.5 kN [2,584 lbf]
Thrust up to:	1.4 kN [325 lbf]	1.9 kN [418 lbf]	1.9 kN [418 lbf]	1.9 kN [418 lbf]
Speed up to:	5.1 m/sec [200 in/sec]	5.1 m/sec [200 in sec]	2.5 m/sec [100 in sec]	3.9 m/sec [150 in/sec]
Stroke Length up to:	14.6 m [574 in]	10.5 m [414 in]	10.5 m [414 in]	10.5 m [414 in]
	www.tolomatic.com for complete information, search by literature number:			
Literature Number:	3600-4176	8500-4000	8500-4000	8500-4000

(Not all models deliver ALL maximum values listed, i.e.: Maximum thrust may not be available with maximum speed)

MXB Rodless Belt Drive Actuators

APPLICATIONS

X-Y Multi-Axis

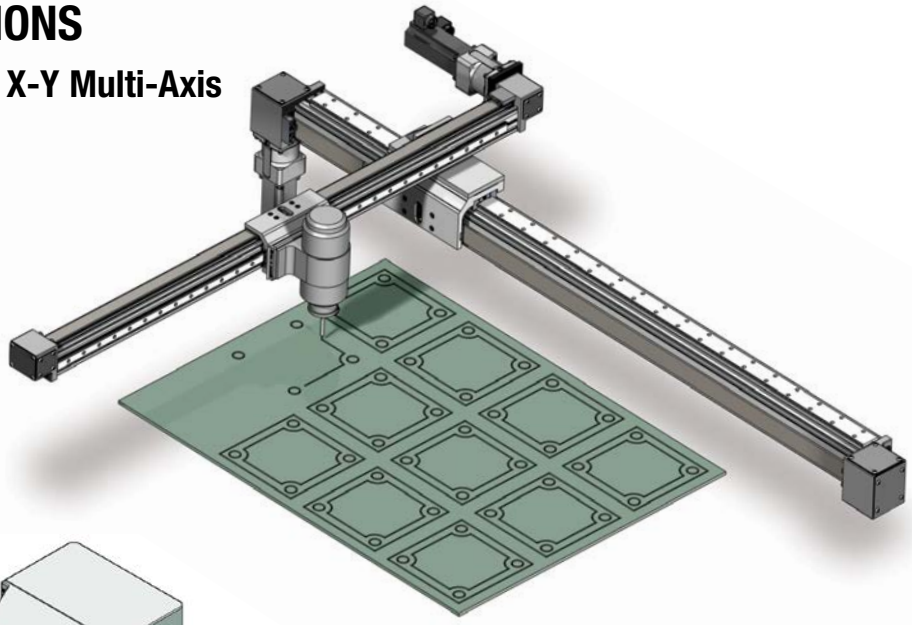

Workcenter Positioning

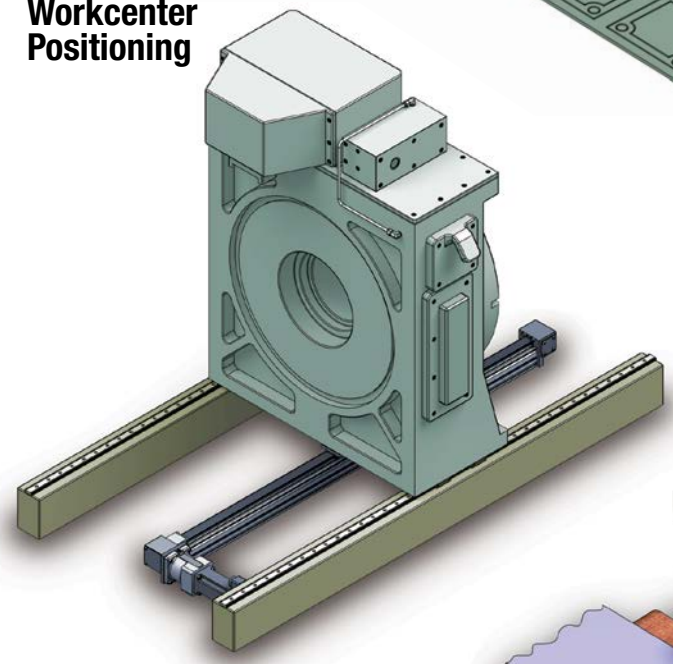

High Speed Flying Cut Off

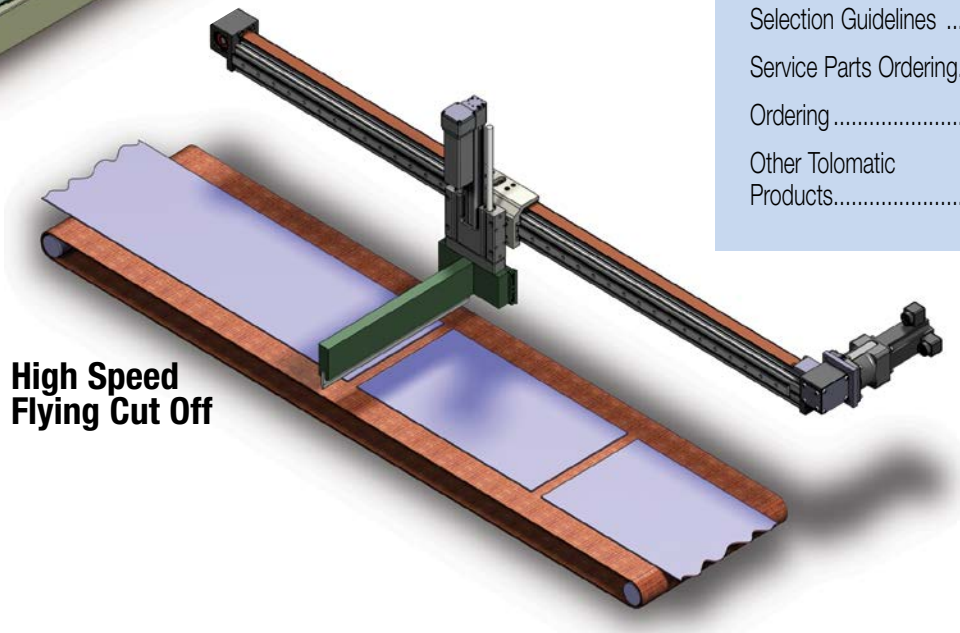

CONTENTS

MXB Belt Drive Actuator.. 2
Applications..... 3
MXB-U Features..... 4
MXB-S Features..... 6
MXB-P Features..... 8
Specifications..... 10
MXB-U Actuator and Options Dimensions..... 19
MXB-S Actuator Dimensions..... 20
MXB-S Option Dimensions..... 21
MXB-P Actuator Dimensions..... 22
MXB-P Option Dimensions..... 23
Motor Mounting..... 24
Switches..... 26
Application Data Worksheet..... 28
Selection Guidelines..... 29
Service Parts Ordering... 30
Ordering..... 31
Other Tolomatic Products..... 32

- Adhesive dispensing
- Aligning
- Animation
- Assembly
- Automotive
- Camera positioning
- Conveyors
- Cutting
- Diverters
- Inspection
- Laser marking
- Material cutting
- Milling
- Packaging equipment
- Parts transfer
- Pick & place
- Positioning
- Product handling
- Pulp & Paper
- Slitting
- Sorting
- Spraying
- Stacking
- Table positioning
- Test stations
- Wire winding

MXB-U UNGUIDED BELT-DRIVE ACTUATOR

ENDURANCE TECHNOLOGY℠

A Tolomatic Design Principle

Endurance Technology℠ features are designed for maximum durability to provide extended service life.

The MXB-U rodless actuator is a pre-assembled compact linear belt solution for use in applications with existing guides & supports. This economical actuator features speeds up to 5080 mm/sec (200 in/sec) and thrusts up to 1859 N (418 lbf). Built-to-order in stroke lengths up to 10,500 mm (414 in).

MOTOR ORIENTATION

YOU CAN CHOOSE:

- Direct drive option directly couples motor to the drive shaft; one-piece housing construction for optimum alignment and support of the motor
- Reduction option in 3:1 reduction (2:1 on MXB16)

DURABLE BELT MATERIAL

High power polyurethane HTD tooth profile belt with steel tensile members resists stretching

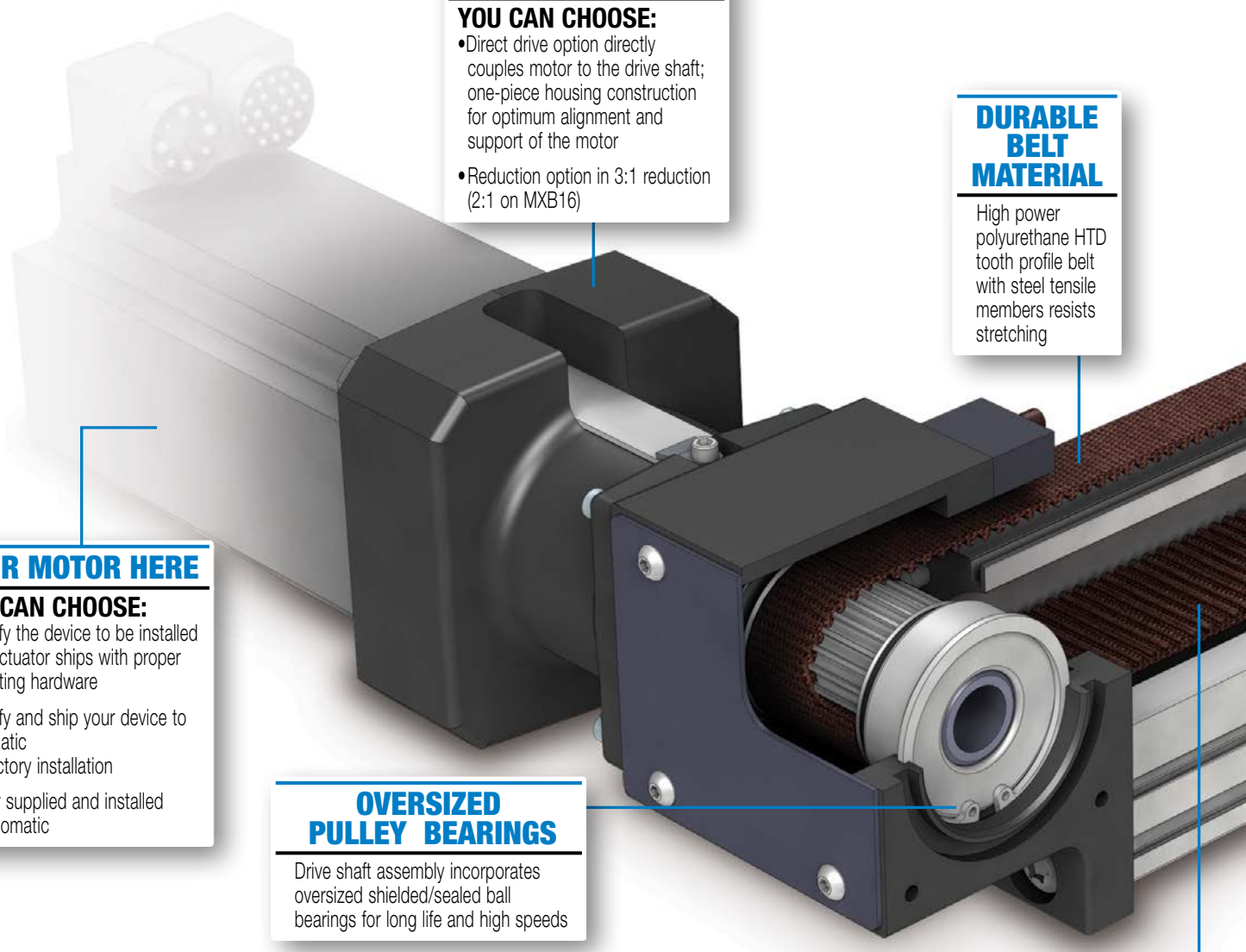

YOUR MOTOR HERE

YOU CAN CHOOSE:

- Specify the device to be installed and actuator ships with proper mounting hardware
- Specify and ship your device to Tolomatic for factory installation
- Motor supplied and installed by Tolomatic

OVERSIZED PULLEY BEARINGS

Drive shaft assembly incorporates oversized shielded/sealed ball bearings for long life and high speeds

STEEL REINFORCED/HTD BELT PROFILE

- Belt of polyurethane material reinforced with steel tension members to produce high carrier thrusts without belt stretch.
- HTD tooth profile distributes tooth load more evenly and provides greater tooth shear strength, allowing for higher thrust loading.
- The deep teeth of the HTD profile are cogging-resistant, preventing potentially damaging positioning errors.

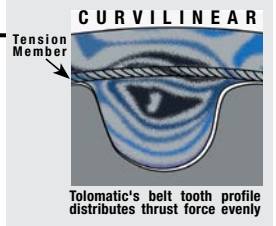

...MAXIMUM DURABILITY

INCH OR METRIC MOUNTING

Your choice of blank, inch (US standard) or metric mounting to the plate

EXTERNAL BUMPERS

Polyurethane bumpers protect the belt and clamp assembly from damage at end-of-stroke

LOW PLATE HEIGHT

Reduces overall actuator envelope

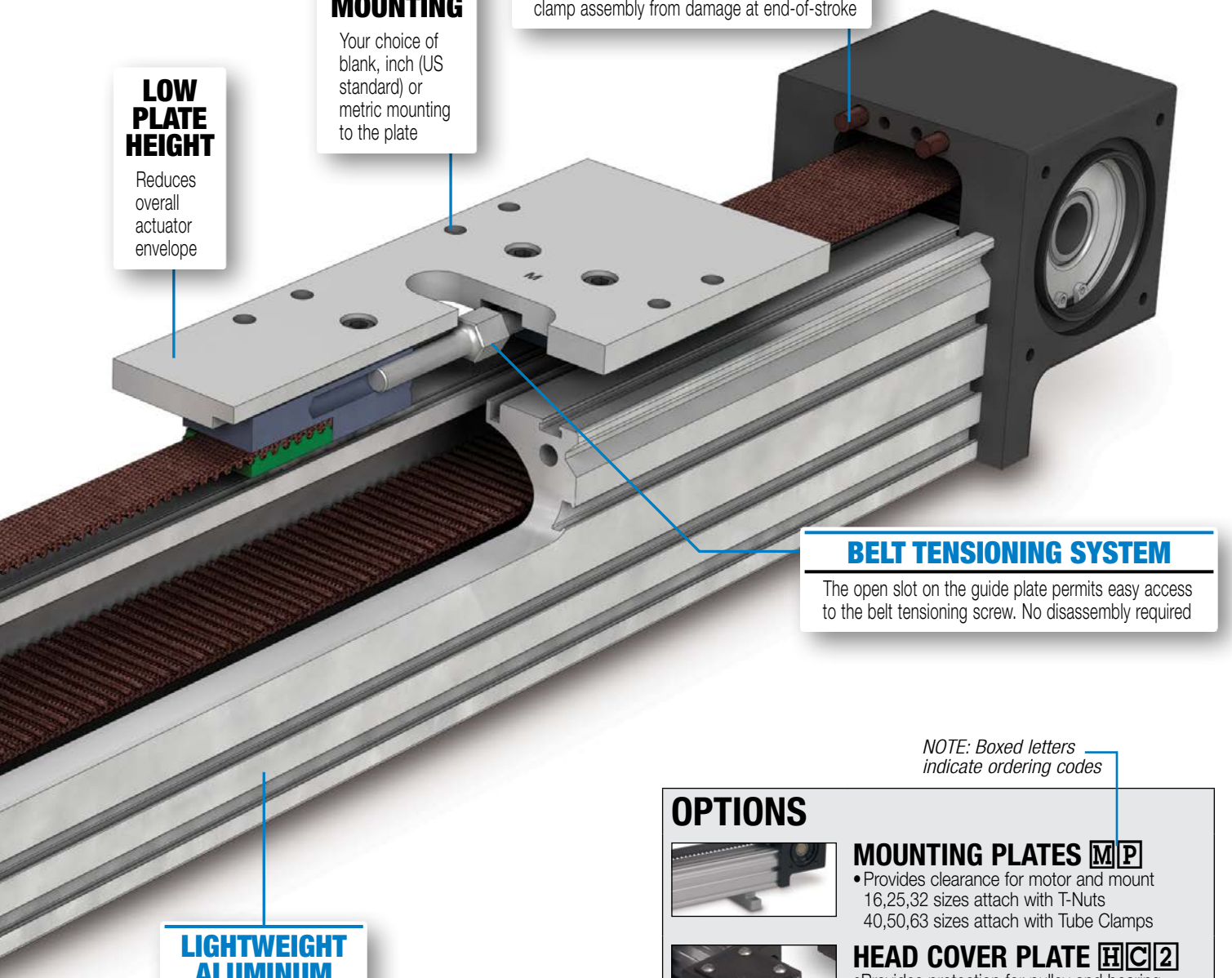

BELT TENSIONING SYSTEM

The open slot on the guide plate permits easy access to the belt tensioning screw. No disassembly required

LIGHTWEIGHT ALUMINUM DESIGN

Clear anodized extrusion design is optimized for rigidity and strength

NOTE: Boxed letters indicate ordering codes

OPTIONS

MOUNTING PLATES M P

- Provides clearance for motor and mount
  16,25,32 sizes attach with T-Nuts
  40,50,63 sizes attach with Tube Clamps



HEAD COVER PLATE H C 2

- Provides protection for pulley and bearing



TUBE CLAMPS T C

- Used for intermediate support
- Flush with bottom of actuator to retain low profile
- Drop-in, adjustable mounting locations (Not available on the MXB16U))



SWITCHES

- Wide variety of sensing choices: Reed, Solid State PNP or NPN, available normally open or normally closed
- Flush mount, drop-in installation
- Bright LEDs, power & signal indication
- CE rated, RoHS compliant

MXB-S SOLID BEARING BELT-DRIVE

ENDURANCE TECHNOLOGY℠

A Tolomatic Design Principle

Endurance Technology℠ features are designed for maximum durability to provide extended service life.

The MXB-S rodless style actuator is a compact linear belt solution for use in applications requiring light to moderate load carrying and guidance. The MXB-S actuator utilizes two field replaceable solid bearings that optimize stress distribution for optimal performance, rigidity and life. This economical actuator features speeds up to 2540 mm/sec (100 in/sec) and thrusts up to 1859 N (418 lbf). Built-to-order in stroke lengths up to 10,500 mm (414 in).

LARGE FLEXIBLE MOUNTING PATTERN

- Carrier gives more load stability
- Directly compatible with existing BCS & BC2 applications
- More fastening options

BELT TENSIONING SYSTEM

The open slot on the guide plate permits easy access to the belt tensioning screw. No disassembly required

EXTERNAL BUMPERS

Polyurethane bumpers protect the belt and clamp assembly from damage at end-of-stroke

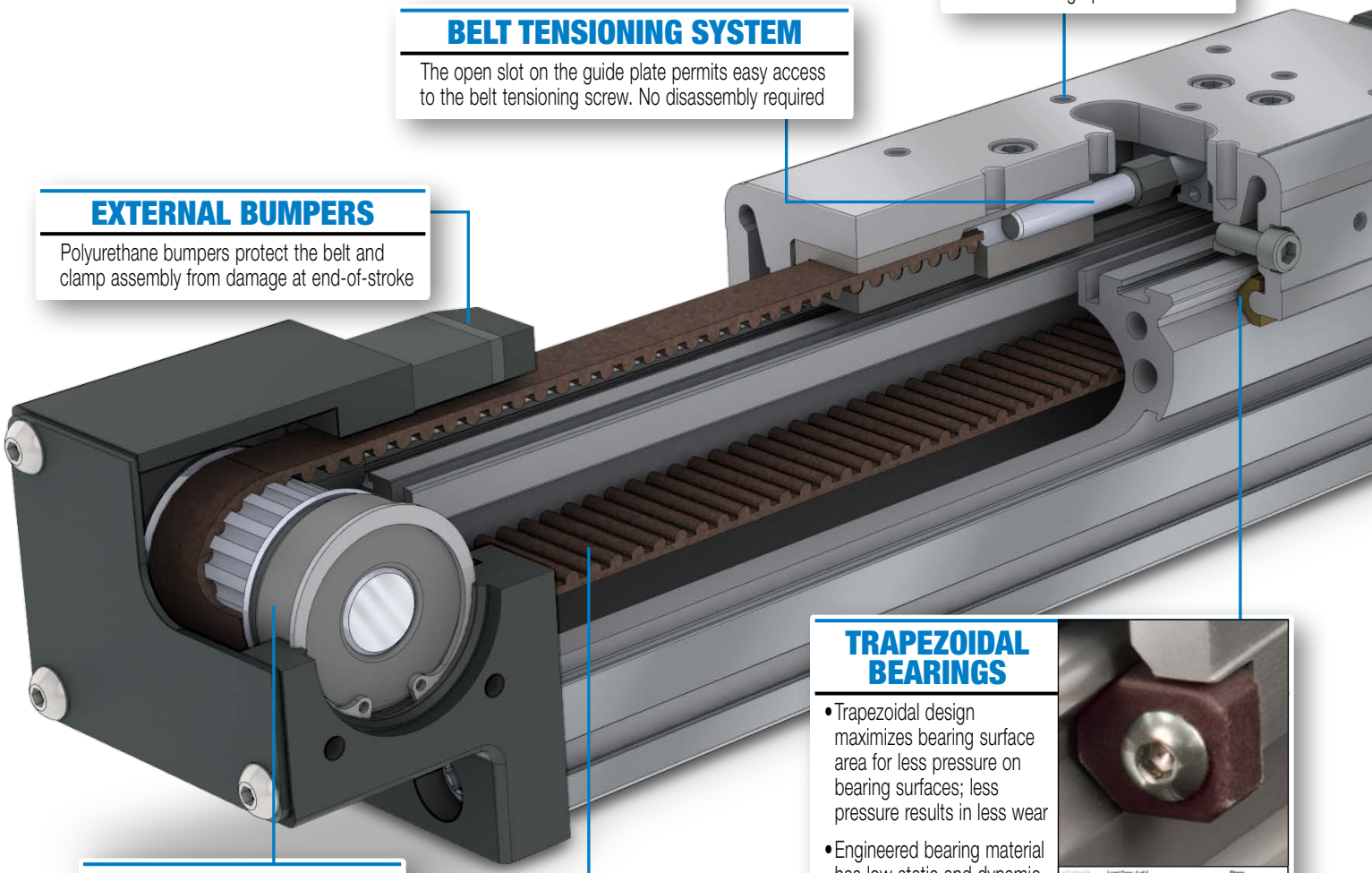

TRAPEZOIDAL BEARINGS

- Trapezoidal design maximizes bearing surface area for less pressure on bearing surfaces; less pressure results in less wear
- Engineered bearing material has low static and dynamic friction with low wear properties for long lasting, smooth operation
- Bearings are field replaceable for extended service life

OVERSIZED PULLEY BEARINGS

Drive shaft assembly incorporates oversized shielded/sealed ball bearings for long life and high speeds

DURABLE BELT MATERIAL

High power polyurethane HTD tooth profile belt with steel tensile members resists stretching

INCH OR METRIC MOUNTING

Your choice of blank, inch (US standard) or metric mounting to the plate

MOTOR ORIENTATION

YOU CAN CHOOSE:

- Direct drive option directly couples motor to the drive shaft; one-piece housing construction for optimum alignment and support of the motor
- Reduction option in 3:1 reduction (2:1 on MXB16)

YOUR MOTOR HERE

YOU CAN CHOOSE:

- Specify the device to be installed and actuator ships with proper mounting hardware
- Specify and ship your device to Tolomatic for factory installation
- Motor supplied and installed by Tolomatic

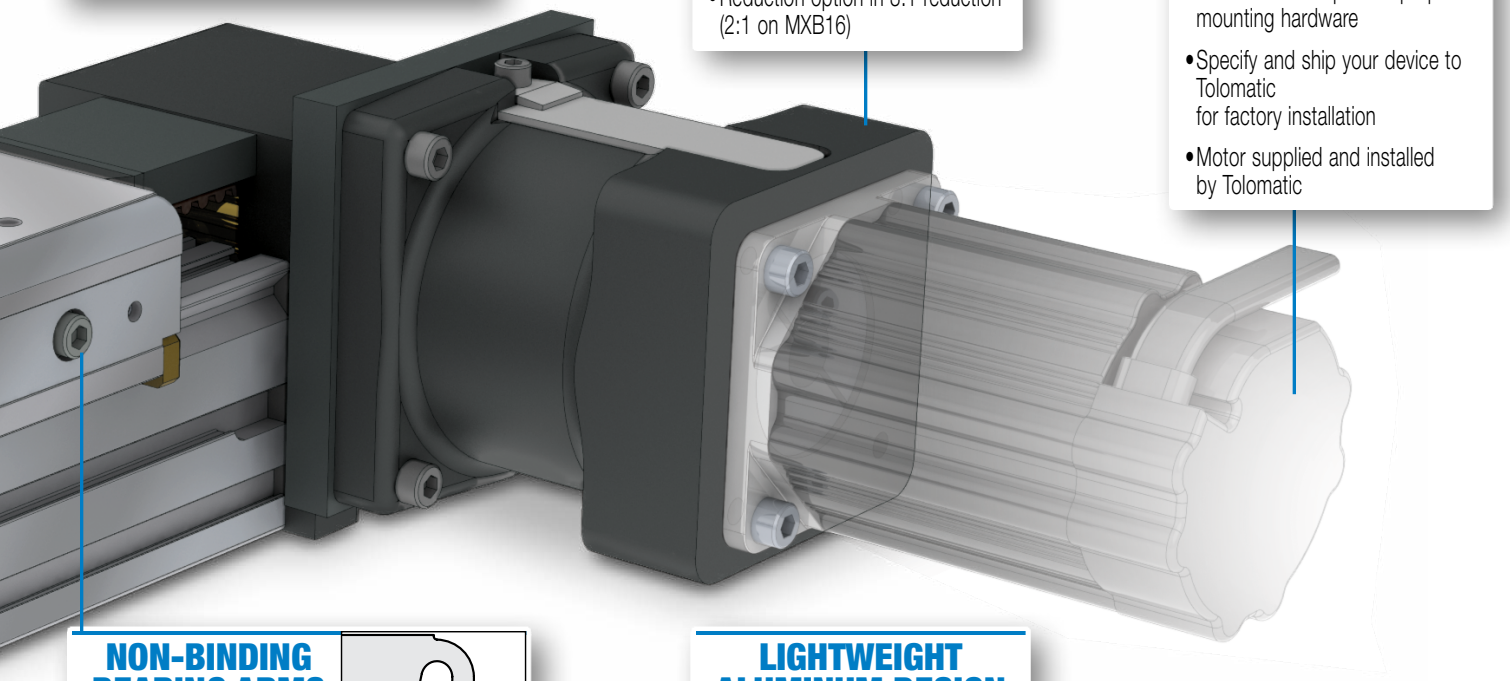

NON-BINDING BEARING ARMS

Bearings are tensioned indirectly, providing bind free adjustment

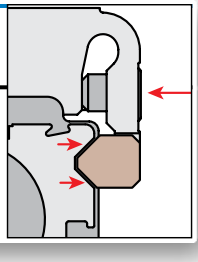

LIGHTWEIGHT ALUMINUM DESIGN

Clear anodized extrusion design is optimized for rigidity and strength

OPTIONS

NOTE: Boxed letters indicate ordering codes



AUXILIARY CARRIER [D][C]

- 2X higher Fz (load) capacity
- High bending moment capacity



MOUNTING PLATES [M][P]

- Provides clearance for motor and mount
  16,25,32 sizes attach with T-Nuts
  40,50,63 sizes attach with Tube Clamps



FLOATING MOUNT [F][L]

- Compensates for non-parallelism between MX actuator and externally guided load



HEAD COVER PLATE [H][C][2]

- Provides protection for pulley and bearing



TUBE CLAMPS [T][C]

- Used for intermediate support
- Flush with bottom of actuator to retain low profile
- Drop-in, adjustable mounting locations (MXB16 uses T-nuts with mounting plates)



SWITCHES

- Wide variety of sensing choices: Reed, Solid State PNP or NPN, available normally open or normally closed
- Flush mount, drop-in installation
- Bright LEDs, power & signal indication
- CE rated, RoHS compliant

MXB-P PROFILED RAIL BELT-DRIVE ACTUATOR

ENDURANCE TECHNOLOGY℠

A Tolomatic Design Principle

Endurance Technology℠ features are designed for maximum durability to provide extended service life.

The MXB-P rodless electric belt-drive actuator is designed for applications requiring moderate to heavy load carrying and guidance. The MXB-P actuator features a profiled rail system with recirculating ball linear guides for optimal performance.
The MXB-P belt-driven actuator features speeds up to 3810 mm/sec (150 in/sec) and thrusts up to 1859 N (418 lbf). Built-to-order in stroke lengths up to 10,500 mm (414 in).

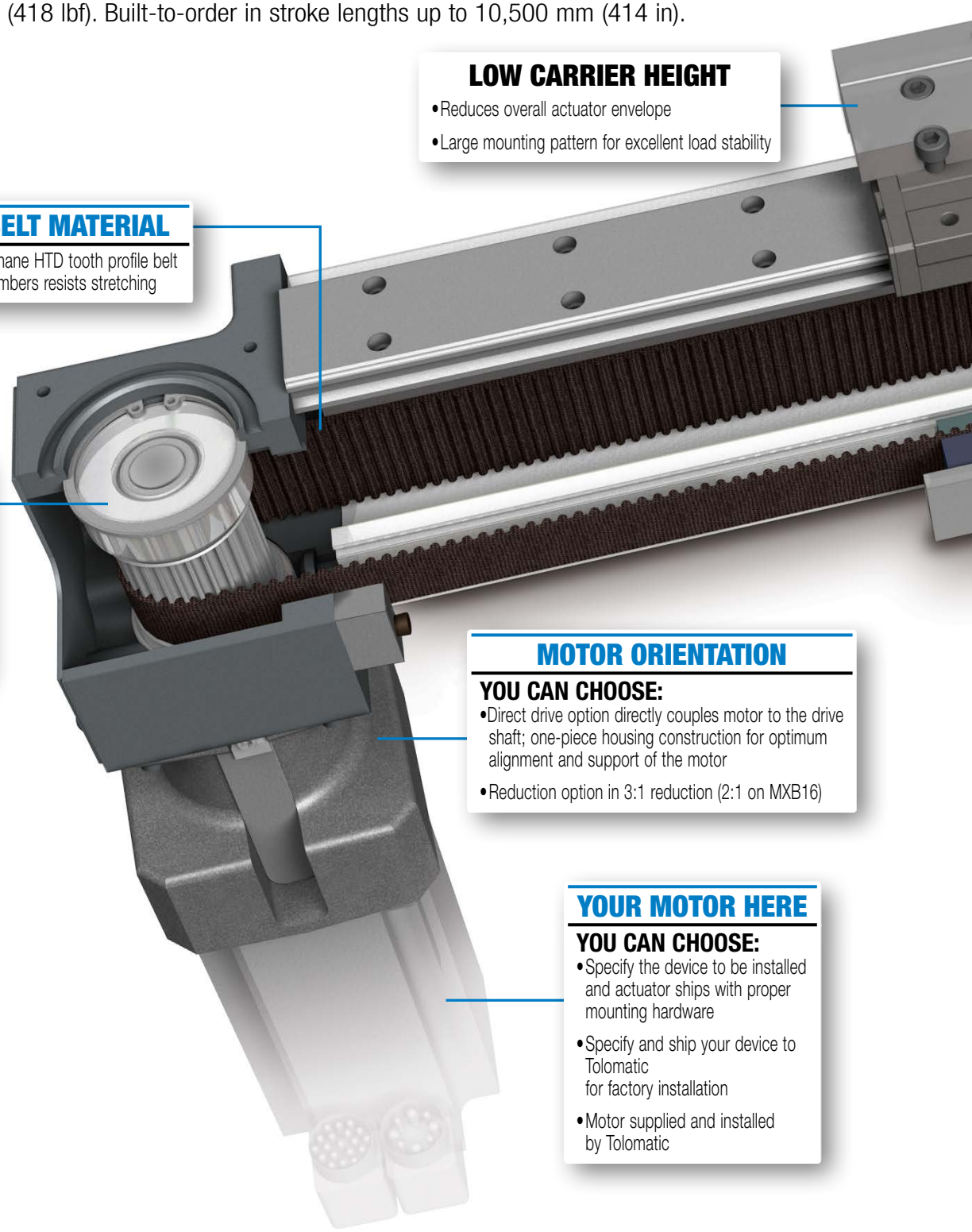

LOW CARRIER HEIGHT

- Reduces overall actuator envelope
- Large mounting pattern for excellent load stability

DURABLE BELT MATERIAL

High power polyurethane HTD tooth profile belt with steel tensile members resists stretching

OVERSIZED PULLEY BEARINGS

Drive shaft assembly incorporates oversized shielded/sealed ball bearings for long life and high speeds

MOTOR ORIENTATION

YOU CAN CHOOSE:

- Direct drive option directly couples motor to the drive shaft; one-piece housing construction for optimum alignment and support of the motor
- Reduction option in 3:1 reduction (2:1 on MXB16)

YOUR MOTOR HERE

YOU CAN CHOOSE:

- Specify the device to be installed and actuator ships with proper mounting hardware
- Specify and ship your device to Tolomatic for factory installation
- Motor supplied and installed by Tolomatic

INCH OR METRIC MOUNTING

Your choice of blank, inch (US standard) or metric mounting to the plate

LIGHTWEIGHT ALUMINUM DESIGN

Clear anodized extrusion design is optimized for rigidity and strength

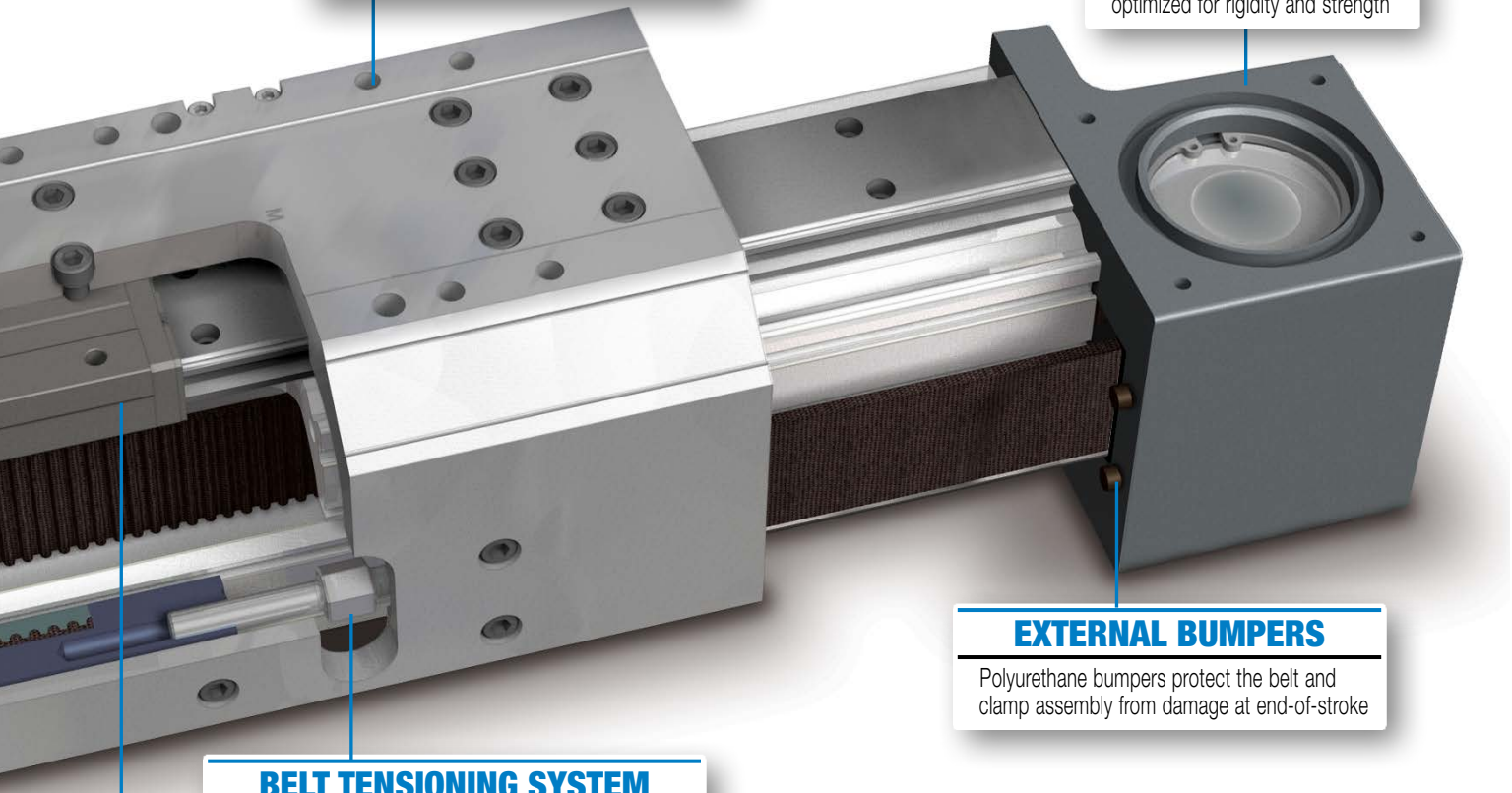

EXTERNAL BUMPERS

Polyurethane bumpers protect the belt and clamp assembly from damage at end-of-stroke

BELT TENSIONING SYSTEM

The open slot on the guide plate permits easy access to the belt tensioning screw. No disassembly required

RECIRCULATING BALL BEARINGS

- Recirculating ball bearings are used to reduce friction and extend actuator life
- Designed with a grease pocket between ball elements to reduce friction, noise and maintenance
- Large permissible moment loads
- High speed operation, low heat generation
- High precision, smooth, low friction motion

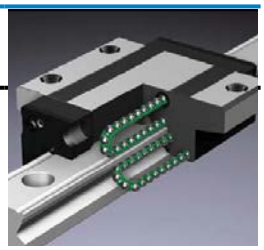

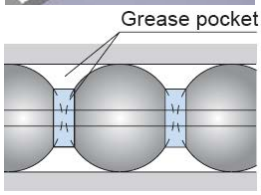

NOTE: Boxed letters indicate ordering codes

OPTIONS



AUXILIARY CARRIER [D][C]

- 2X higher Fz & Fy (load) capacity
- High bending moment capacity



MOUNTING PLATES [M][P]

- Provides clearance for motor and mount
  16,25,32 sizes attach with T-Nuts
  40,50,63 sizes attach with Tube Clamps



TUBE CLAMPS [T][C]

- Used for intermediate support
- Flush with bottom of actuator to retain low profile
- Drop-in adjustable mounting locations

(Not available on the 16, 25 or 32 MXB-P sizes)



HEAD COVER PLATE [H][C][2]

- Provides protection for pulley and bearing



SWITCHES

- Wide variety of sensing choices: Reed, Solid State PNP or NPN, available normally open or normally closed
- Flush mount, drop-in installation
- Bright LEDs, power & signal indication
- CE rated, RoHS compliant

MXB Rodless Belt Drive Actuators

ACTUATOR SPECIFICATIONS AND BREAKAWAY TORQUE

MXB [U], [S] & [P]						BREAKAWAY TORQUE	
MXB SIZE	BELT WIDTH	BELT DEAD LENGTH	PULLEY PITCH DIA.	STROKE PER REV.	MAX. STROKE	SINGLE CARRIER	AUX. CARRIER OPT. (MXB-P)
	mm	mm	mm	mm	m	N-m	N-m
16	10	363.0	19.1	60.1	5.84	0.452	0.678
25	18	475.5	25.5	80.0	10.5	0.565	0.791
32	25	556.0	31.8	100.0	10.5	0.904	1.130
40	30	633.7	38.2	120.0	10.5	1.130	1.356
50	40	692.2	44.6	140.0	10.4	1.695	2.034
63	50	917.2	54.1	170.0	5.51	2.260	2.825

MXB [U], [S] & [P]						BREAKAWAY TORQUE	
MXB SIZE	BELT WIDTH	BELT DEAD LENGTH	PULLEY PITCH DIA.	STROKE PER REV.	MAX. STROKE	SINGLE CARRIER	AUX. CARRIER OPT. (MXB-P)
	in	in	in	in	in	lb-in	lb-in
16	0.39	14.29	0.753	2.366	230	4.0	6.0
25	0.71	18.72	1.003	3.151	414	5.0	7.0
32	0.98	21.89	1.253	3.936	413	8.0	10.0
40	1.18	24.95	1.504	4.725	412	10.0	12.0
50	1.57	27.25	1.754	5.510	410	15.0	18.0
63	1.97	36.11	2.130	6.692	217	20.0	25.0

	WEIGHT				INERTIA		
[U] MXB-U SIZE	PLATE ASSEMBLY	BELT TENSIONER ASSEMBLY	BASE ACTUATOR	PER cm OF STROKE	DRIVE/IDLE PULLEY ASSEMBLIES	PLATE ASSEMBLY (INCLUDING BELT TENSIONER ASSEMBLY)	PER cm OF STROKE
	kg	kg	kg	kg/cm	kg-cm²	kg-cm²	kg-cm²
16	0.05	0.05	0.72	0.0150	0.0250	0.0870	0.0006
25	0.12	0.07	1.17	0.0246	0.0759	0.3073	0.0020
32	0.22	0.13	1.89	0.0423	0.4143	0.8906	0.0043
40	0.41	0.21	3.55	0.0629	1.0884	2.2430	0.0075
50	0.47	0.33	4.50	0.0843	2.1196	3.9449	0.0135
63	1.15	0.38	7.46	0.1488	5.7101	11.1931	0.0249

	WEIGHT				INERTIA		
[U] MXB-U SIZE	PLATE ASSEMBLY	BELT TENSIONER ASSEMBLY	BASE ACTUATOR	PER in OF STROKE	DRIVE/IDLE PULLEY ASSEMBLIES	PLATE ASSEMBLY (INCLUDING BELT TENSIONER ASSEMBLY)	PER in OF STROKE
	lb	lb	lb	lb/in	lb-in²	lb-in²	lb-in²
16	0.11	0.10	1.59	0.084	0.0085	0.0297	0.0005
25	0.27	0.15	2.59	0.138	0.0259	0.1050	0.0017
32	0.48	0.30	4.17	0.237	0.1416	0.3043	0.0037
40	0.90	0.46	7.83	0.352	0.3719	0.7665	0.0065
50	1.03	0.72	9.93	0.472	0.7243	1.3480	0.0117
63	2.54	0.83	16.44	0.833	1.9512	3.8249	0.0216

	WEIGHT				INERTIA			
[S] MXB-S SIZE	CARRIER ASSEMBLY	BELT TENSIONER ASSEMBLY	BASE ACTUATOR	PER cm OF STROKE	DRIVE/IDLE PULLEY ASSEMBLIES	CARRIER ASSEMBLY (INCLUDING BELT TENSIONER ASSEMBLY) SINGLE CARRIER	CARRIER ASSEMBLY (INCLUDING BELT TENSIONER ASSEMBLY) AUX. CARRIER OPT.	PER cm OF STROKE
	kg	kg	kg	kg/cm	kg-cm²	kg-cm²	kg-cm²	kg-cm²
16	0.15	0.05	0.84	0.0150	0.0250	0.1782	0.3151	0.0006
25	0.24	0.07	1.65	0.0246	0.0759	0.5060	0.9035	0.0020
32	0.45	0.14	2.63	0.0423	0.4143	1.4879	2.6365	0.0043
40	0.80	0.21	5.06	0.0629	1.0884	3.6828	6.6119	0.0075
50	1.17	0.33	7.35	0.0843	2.1196	7.4111	13.1956	0.0135
63	3.42	0.38	14.56	0.1488	5.7101	27.7891	52.8158	0.0249

	WEIGHT				INERTIA			
[S] MXB-S SIZE	CARRIER ASSEMBLY	BELT TENSIONER ASSEMBLY	BASE ACTUATOR	PER in OF STROKE	DRIVE/IDLE PULLEY ASSEMBLIES	CARRIER ASSEMBLY (INCLUDING BELT TENSIONER ASSEMBLY) SINGLE CARRIER	CARRIER ASSEMBLY (INCLUDING BELT TENSIONER ASSEMBLY) AUX. CARRIER OPT.	PER in OF STROKE
	lb	lb	lb	lb/in	lb-in²	lb-in²	lb-in²	lb-in²
16	0.33	0.10	1.86	0.084	0.0085	0.0609	0.1077	0.0005
25	0.54	0.15	3.64	0.138	0.0259	0.1729	0.3087	0.0017
32	1.00	0.30	5.80	0.237	0.1416	0.5084	0.9009	0.0037
40	1.77	0.46	11.16	0.352	0.3719	1.2585	2.2594	0.0065
50	2.57	0.72	16.20	0.472	0.7243	2.5325	4.5092	0.0117
63	7.54	0.83	32.10	0.833	1.9512	9.4960	18.0481	0.0216

	WEIGHT				INERTIA			
[P] MXB-P SIZE	CARRIER ASSEMBLY	BELT TENSIONER ASSEMBLY	BASE ACTUATOR	PER cm OF STROKE	DRIVE/IDLE PULLEY ASSEMBLIES	CARRIER ASSEMBLY (INCLUDING BELT TENSIONER ASSEMBLY) SINGLE CARRIER	CARRIER ASSEMBLY (INCLUDING BELT TENSIONER ASSEMBLY) AUX. CARRIER OPT.	PER cm OF STROKE
	kg	kg	kg	kg/cm	kg-cm²	kg-cm²	kg-cm²	kg-cm²
16	0.18	0.05	1.08	0.0183	0.0250	0.2014	0.3615	0.0006
25	0.38	0.07	1.98	0.0348	0.0759	0.7297	1.3508	0.0020
32	0.74	0.13	3.55	0.0569	0.4143	2.2232	4.1072	0.0043
40	1.14	0.21	6.38	0.0959	1.0884	4.9138	9.0740	0.0075
50	2.28	0.33	9.45	0.1337	2.1196	12.9416	24.2565	0.0135
63	4.25	0.38	16.89	0.1981	5.7101	33.8324	64.9024	0.0249

	WEIGHT				INERTIA			
[P] MXB-P SIZE	CARRIER ASSEMBLY	BELT TENSIONER ASSEMBLY	BASE ACTUATOR	PER in OF STROKE	DRIVE/IDLE PULLEY ASSEMBLIES	CARRIER ASSEMBLY (INCLUDING BELT TENSIONER ASSEMBLY) SINGLE CARRIER	CARRIER ASSEMBLY (INCLUDING BELT TENSIONER ASSEMBLY) AUX. CARRIER OPT.	PER in OF STROKE
	lb	lb	lb	lb/in	lb-in²	lb-in²	lb-in²	lb-in²
16	0.39	0.10	2.38	0.102	0.0085	0.0688	0.1235	0.0005
25	0.84	0.15	4.36	0.195	0.0259	0.2493	0.4616	0.0017
32	1.64	0.30	7.83	0.318	0.1416	0.7597	1.4035	0.0037
40	2.51	0.46	14.07	0.537	0.3719	1.6791	3.1007	0.0065
50	5.03	0.72	20.84	0.749	0.7243	4.4224	8.2889	0.0117
63	9.36	0.83	37.24	1.110	1.9512	11.5611	22.1783	0.0216

MAXIMUM VELOCITY [U]	5080 mm/sec	*200 in/sec*
MAXIMUM VELOCITY [S]	2540 mm/sec	*100 in/sec*
MAXIMUM VELOCITY [P]	3810 mm/sec	*150 in/sec*
MAXIMUM ACCELERATION	30.48 m/sec²	*1200 in/sec²*
REPEATABILITY	± 0.051 mm	*± 0.002 in*
TEMPERATURE RANGE	-12 to 54 °C	*10 to 130 °F*

⚠ Heat generated by the motor and drive should be taken into consideration as well as linear velocity and work cycle time. For applications that require operation outside of the recommended temperature range, contact the factory.

STRAIGHTNESS, FLATNESS 0.01702 L mm *0.00067 L in*
Actuator mounted on a flat surface and fully restrained (see Mounting Plate Requirements, page MXB_11) L = Maximum distance between supports

⚠ The listed values relating to straightness/flatness are intended for reference purposes only, and not as an engineering standard of absolute tolerance for a given actuator. Appropriate installation is the single most important factor in reducing variation, so good engineering practices such as measurement, mapping, etc. must be employed in applications with stringent straightness/flatness requirements.

sizeit.tolomatic.com for fast, accurate actuator selection

S & P TUBE CLAMP REQUIREMENTS

S SOLID BEARING

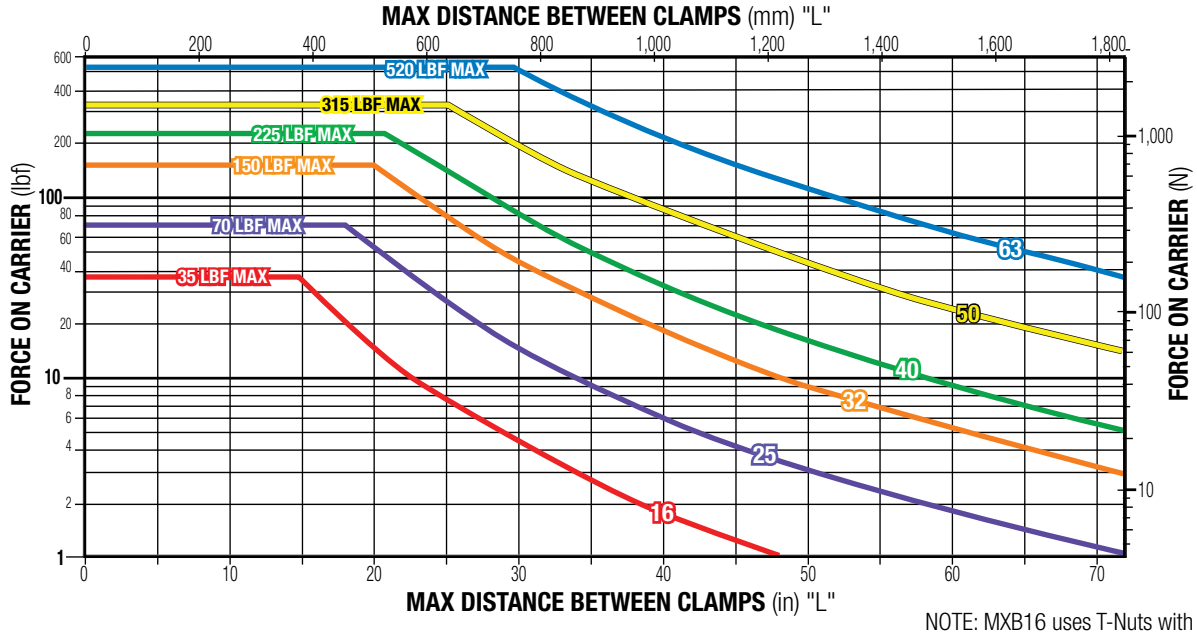

NOTE: MXB16 uses T-Nuts with mounting plates

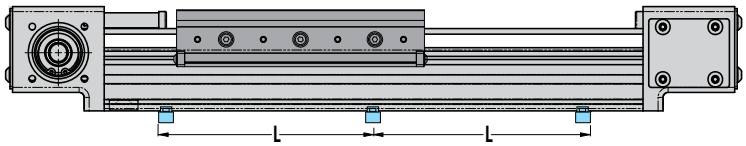

P PROFILE RAIL BEARING

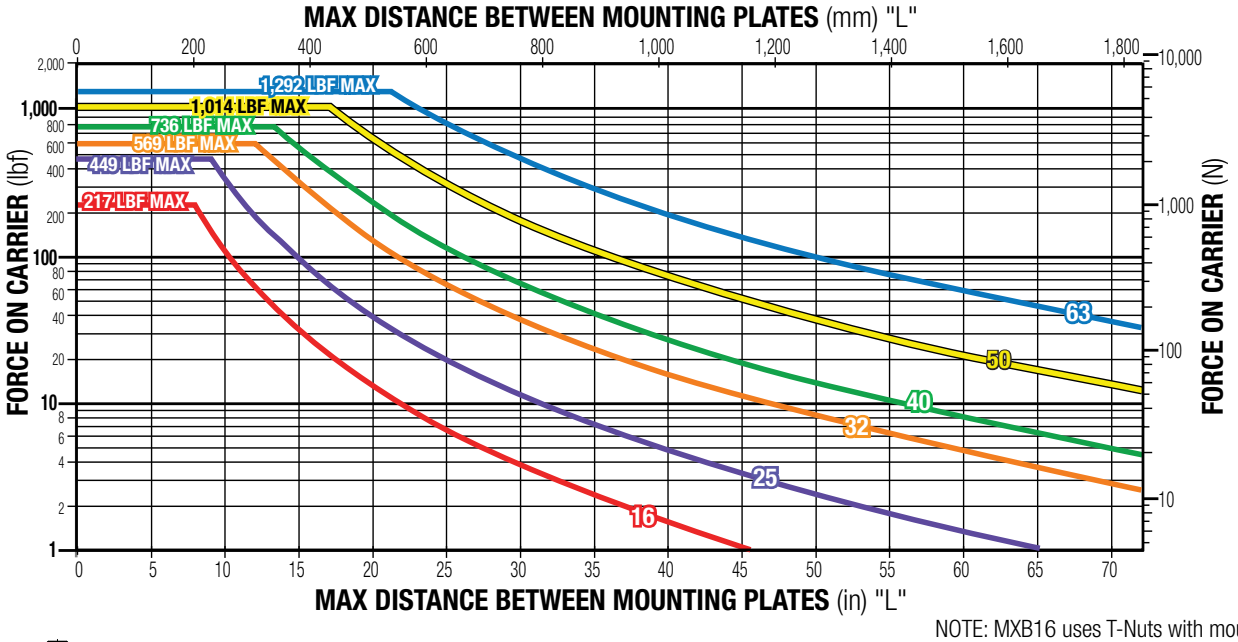

NOTE: MXB16 uses T-Nuts with mounting plates

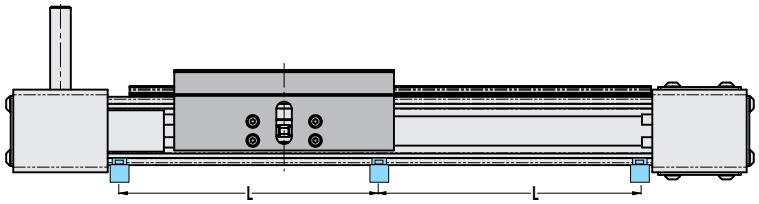

STANDARD



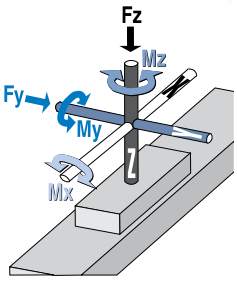

US Measurements

Size	Bore	Maximum Bending Moments* Mx	My	Mz	Max. Load Fz
	in	in-lb	in-lb	in-lb	lb
16	0.6	22	19	25	35
25	1.0	60	110	34	70
32	1.3	100	350	140	150
40	1.5	275	600	220	225
50	2.0	315	1,155	341	315
63	2.5	585	2,340	520	520

Metric Measurements

Size	Bore	Maximum Bending Moments* Mx	My	Mz	Max. Load Fz
	mm	N-m	N-m	N-m	kg
16	16	2.5	2.1	2.8	16
25	25	6.8	12	3.8	32
32	32	11	40	16	68
40	38	31	68	25	102
50	50	36	131	39	143
63	64	66	264	59	236

Ratings are the maximum values for shock-free, vibration-free operation in a typical industrial environment.
Contact Tolomatic for assistance in selecting the most appropriate actuator for your application.

The moment and load capacity of the actuator's bearing system is based on an L10 life of 5,000 linear km ($2x10^8$ in) of travel. Life of the actuator will vary for each application depending on the combined loads, motion parameters and operating conditions. The load factor (L_F) ratios for each application must not exceed a value of 1 (as calculated below). Exceeding a load factor of 1 will diminish the actuator's rated life.

$$L_f = \frac{Mx}{Mx_{max}} + \frac{My}{My_{max}} + \frac{Mz}{Mz_{max}} + \frac{Fy}{Fy_{max}} + \frac{Fz}{Fz_{max}} \leq 1$$

With combined loads, L_F must not exceed the value 1.

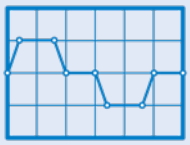

sizeit.tolomatic.com for fast, accurate actuator selection

sizeit.tolomatic.com for fast, accurate actuator selection or call Tolomatic (1-800-328-2174) with application information. We will provide any assistance needed to determine the proper MXE screw-driven actuator.



tolomatic.com/ask
Technical support before and after purchase

DW AUXILIARY CARRIER



	Size	Bore	"D" min	Maximum Bending Moments* MxA	MyA	MzA	Max. Load FzA
		in	in	in-lb	in-lb	in-lb	lb
US Measurements	16	0.6	5.0	44	175	175	70
	25	1.0	6.0	120	420	420	140
	32	1.3	7.0	200	1,050	1,050	300
	40	1.5	8.5	550	1,913	1,913	450
	50	2.0	8.6	630	2,709	2,709	630
	63	2.5	13	1,170	6,760	6,760	1,040

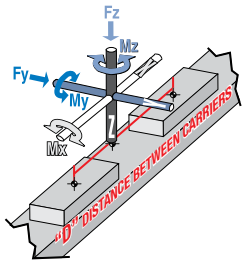

	Size	Bore	"D" min	Maximum Bending Moments* MxA	MyA	MzA	Max. Load FzA
		mm	mm	N-m	N-m	N-m	kg
Metric Measurements	16	16	127.0	5.0	20	20	32
	25	25	152.0	14	48	48	64
	32	32	178.0	23	119	119	136
	40	38	216.0	62	216	216	204
	50	50	218.0	71	306	306	286
	63	64	330.0	132	764	764	472

*At minimum "D" distance between carriers see graph below for other distances

Ratings are the maximum values for shock-free, vibration-free operation in a typical industrial environment. Contact Tolomatic for assistance in selecting the most appropriate actuator for your application.

See additional information on previous page

Mya & Mza vs. DISTANCE

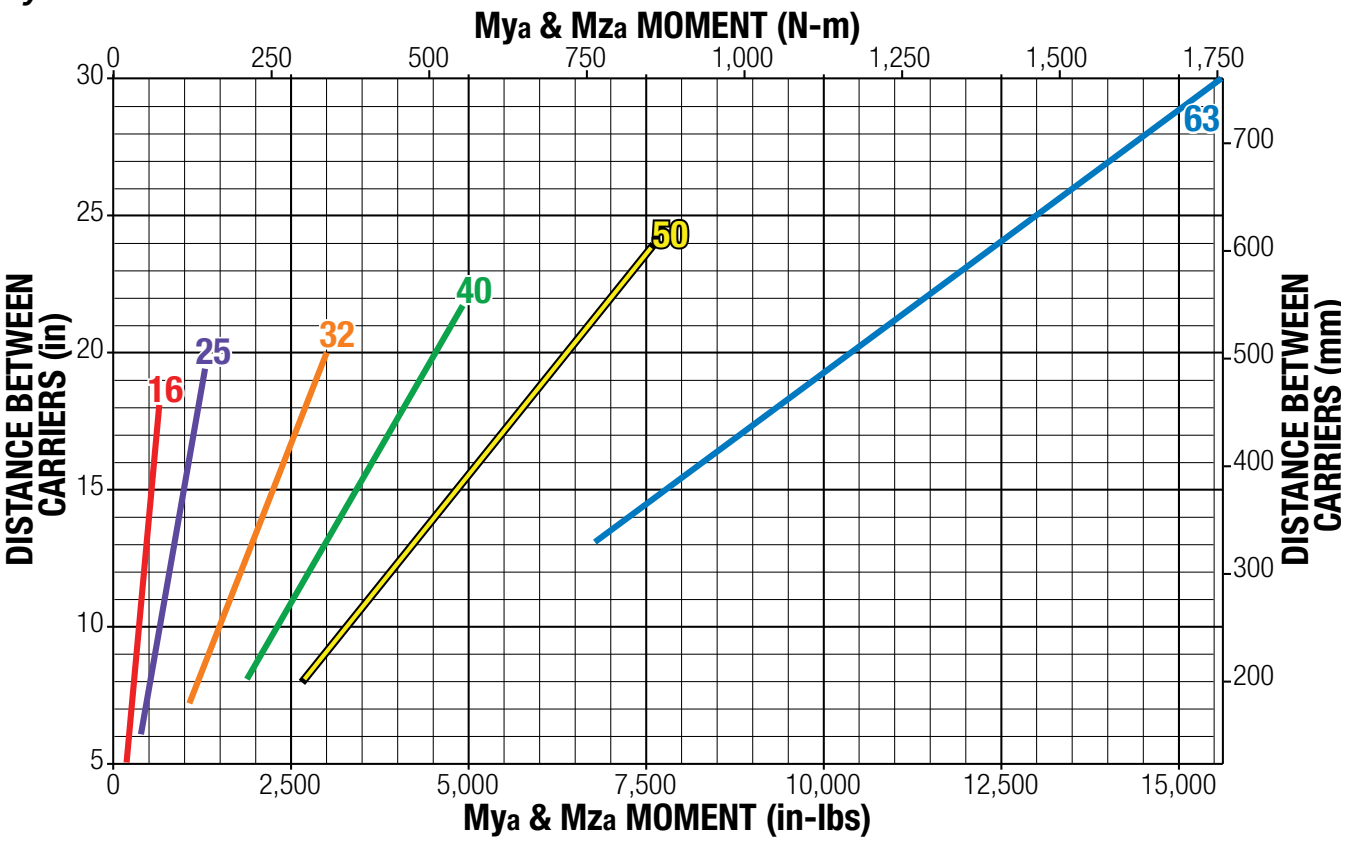

Ratings were calculated with the following conditions:

1.) Coupling between carriers is rigid.
2.) Load is equally distributed between carriers.
3.) Coupling device applies no misaligned loads to carriers.

P PROFILED RAIL MOMENT AND LOAD CAPACITY

STANDARD



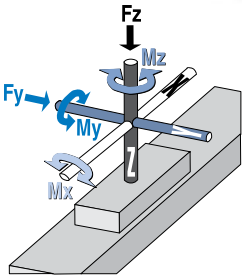

	Size	Bore	Maximum Bending Moments* Mx	My	Mz	Max. Load Fz	Fy
US Measurements		in	in-lb	in-lb	in-lb	lb	lb
	16	0.6	47	406	406	261	261
	25	1.0	151	602	452	539	539
	32	1.3	272	1,613	1,613	683	683
	40	1.5	725	2,296	2,296	883	883
	50	2.0	974	4,180	4,180	1,217	1,217
	63	2.5	1,223	6,407	6,407	1,500	1,500

	Size	Bore	Maximum Bending Moments* Mx	My	Mz	Max. Load Fz	Fy
Metric Measurements		mm	N-m	N-m	N-m	kg	kg
	16	16	5.3	46	46	118	118
	25	25	17	68	51	244	244
	32	32	31	182	182	310	310
	40	38	82	259	259	401	401
	50	50	110	472	472	552	552
	63	64	138	724	724	703	703

Ratings are the maximum values for shock-free, vibration-free operation in a typical industrial environment. Contact Tolomatic for assistance in selecting the most appropriate actuator for your application.

NOTE: Mating surface of component mounted to carrier must maintain a flatness of at least 0.0015" (0.040 mm)

The moment and load capacity of the actuator's bearing system is based on an L10 life of 5,000 linear km ($2x10^8$ in) of travel. Life of the actuator will vary for each application depending on the combined loads, motion parameters and operating conditions. The load factor (L_F) ratios for each application must not exceed a value of 1 (as calculated below). Exceeding a load factor of 1 will diminish the actuator's rated life.

$$L_F = \frac{Mx}{Mx_{max}} + \frac{My}{My_{max}} + \frac{Mz}{Mz_{max}} + \frac{Fy}{Fy_{max}} + \frac{Fz}{Fz_{max}} \leq 1$$

With combined loads, L_F must not exceed the value 1.

SPEED FACTOR

FOR APPLICATIONS WITH HIGH SPEED OR SIGNIFICANT SHOCK AND VIBRATION: Calculated values of loads and bending moments must be increased by speed factor from the graph at right to obtain full rated life of profiled rail bearing system.

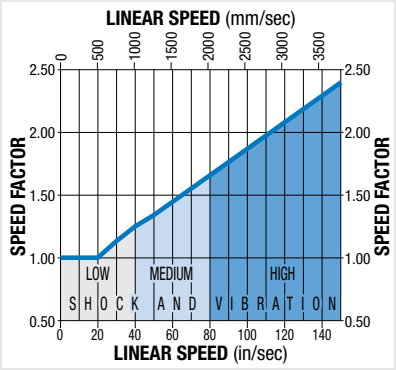

PROFILED RAIL LUBRICATION

Proper lubrication of profiled rail bearing system is essential for normal operation and achievement of full rated life of MX--P actuators. Lubrication should be performed at intervals of 102 km ($4x10^6$ in) of travel or once every year, whichever occurs first. **However, operating conditions such as high speed or significant shock and vibration may require more frequent lubrication.** Please consult Tolomatic for recommendations.

Recommended grease types:

1. Refined mineral oil-based multi-purpose grease with lithium thickening agent.
2. High-grade synthetic oil-based grease with urea thickening agent.

DW AUXILIARY CARRIER



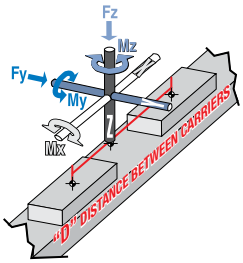

	Size	Bore	"D" min	Maximum Bending Moments* MxA	MyA	MzA	Max. Load FzA	FyA
US Measurements		in	in	in-lb	in-lb	in-lb	lb	lb
	16	0.6	5.0	95	744	744	521	521
	25	1.0	6.0	303	1,932	1,932	1,077	1,077
	32	1.3	7.0	543	2,643	2,643	1,366	1,366
	40	1.5	8.5	1,449	4,322	4,322	1,767	1,767
	50	2.0	8.6	1,947	5,959	5,959	2,433	2,433
	63	2.5	13	2,446	11,409	11,409	3,100	3,100

	Size	Bore	"D" min	Maximum Bending Moments* MxA	MyA	MzA	Max. Load FzA	FyA
Metric Measurements		mm	mm	N-m	N-m	N-m	kg	kg
	16	16	127	11	84	84	236	236
	25	25	152	34	218	218	489	489
	32	32	178	61	299	299	620	620
	40	38	216	164	488	488	801	801
	50	50	218	220	673	673	1,104	1,104
	63	64	330	276	1,289	1,289	1,406	1,406

*At minimum "D" distance between carriers see graph below for other distances

Mya & Mza vs. DISTANCE

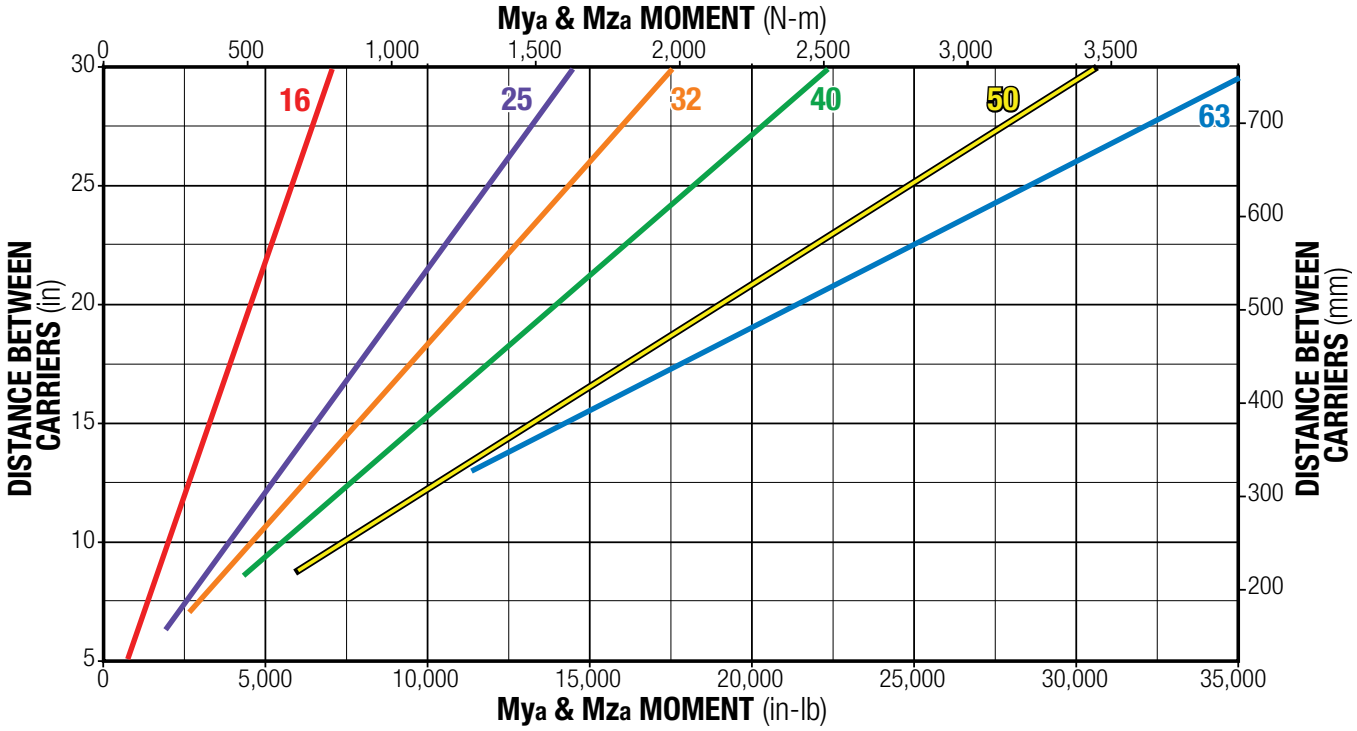

Ratings were calculated with the following conditions:

1.) Coupling between carriers is rigid.
2.) Load is equally distributed between carriers.
3.) Coupling device applies no misaligned loads to carriers.

LOAD DEFLECTION

DEFLECTION TESTING WAS DONE UNDER THESE CRITERIA:

1.) Actuator was properly mounted with distance between mounting plates within recommendations

2.) Deflection was measured at 12" from center of carrier as shown *(see Mounting Plate Requirements page MXB_11)*

DEFLECTION ABOUT X AXIS

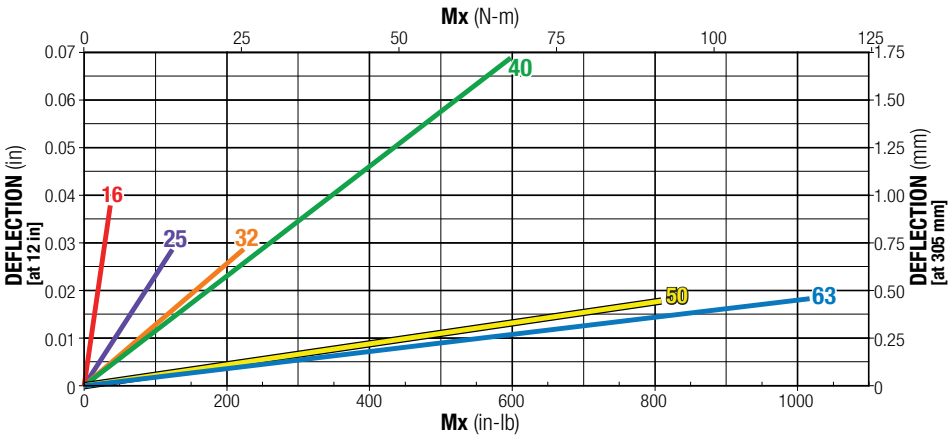

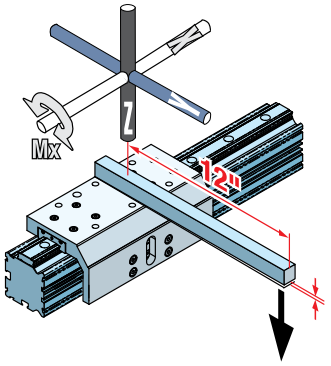

DEFLECTION ABOUT Y AXIS

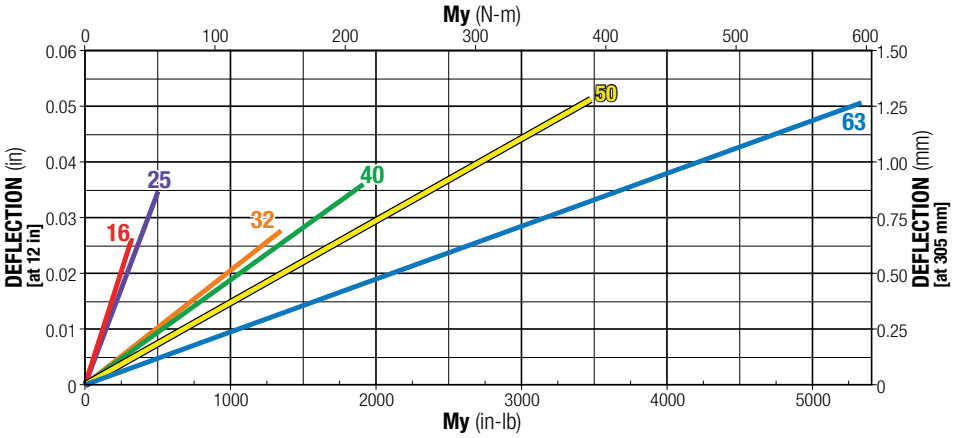

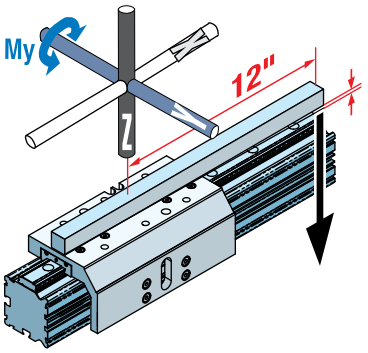

DEFLECTION ABOUT Z AXIS

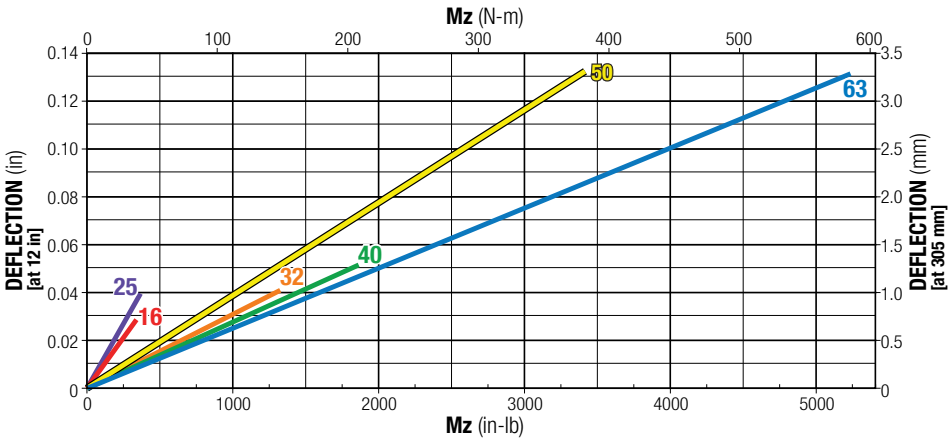

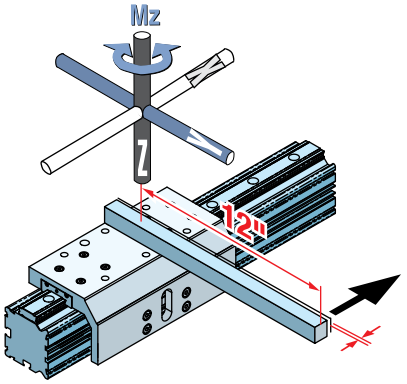

U UNGUIDED: MAXIMUM ACCELERATION AS A FUNCTION OF EXTERNALLY GUIDED LOAD WEIGHT

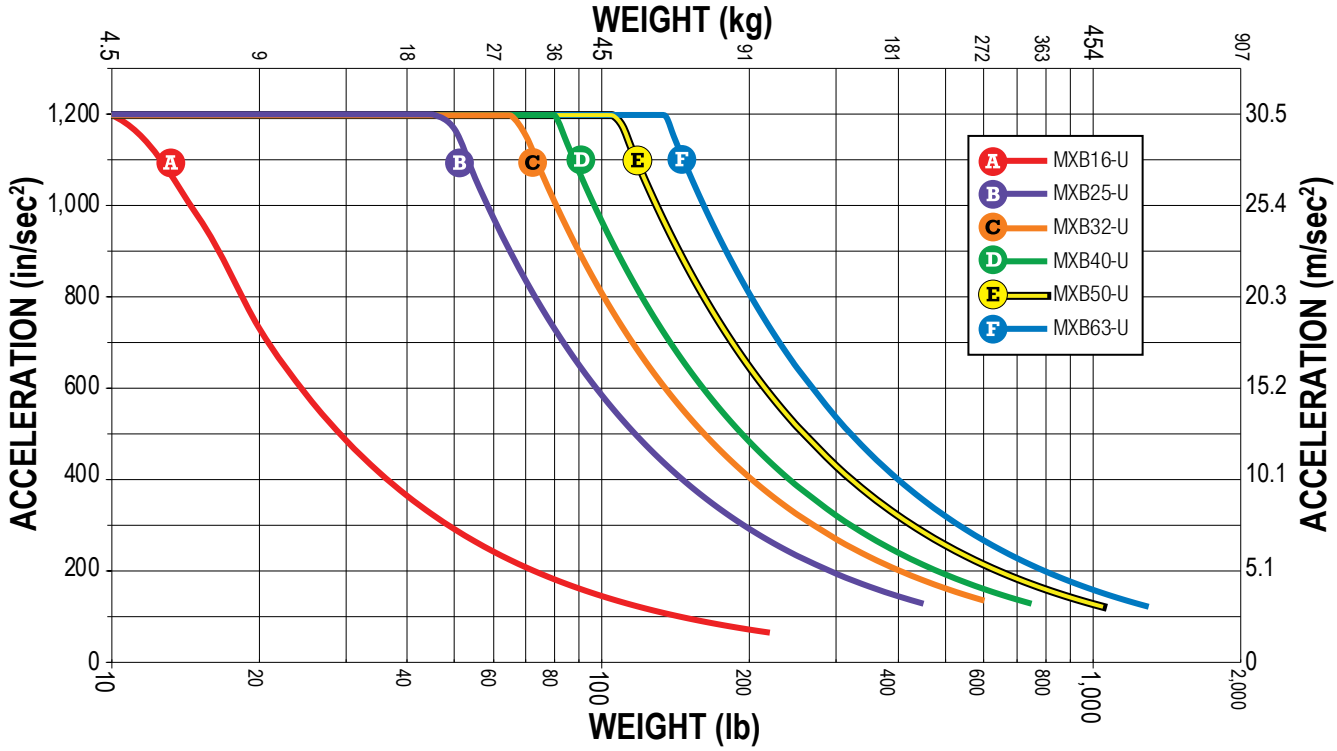

S SOLID BEARING: MAXIMUM ACCELERATION AS A FUNCTION OF LOAD WEIGHT

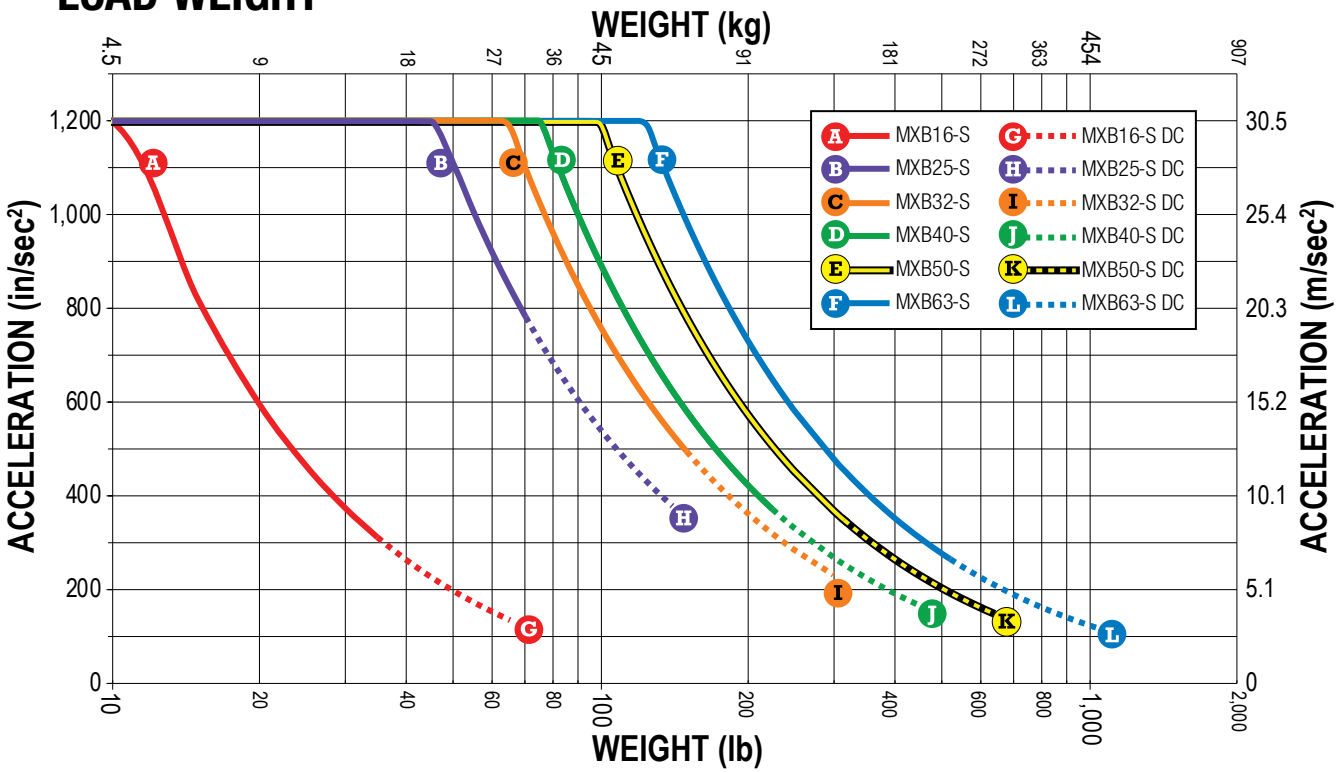

P PROFILED RAIL: MAXIMUM ACCELERATION AS A FUNCTION OF LOAD WEIGHT

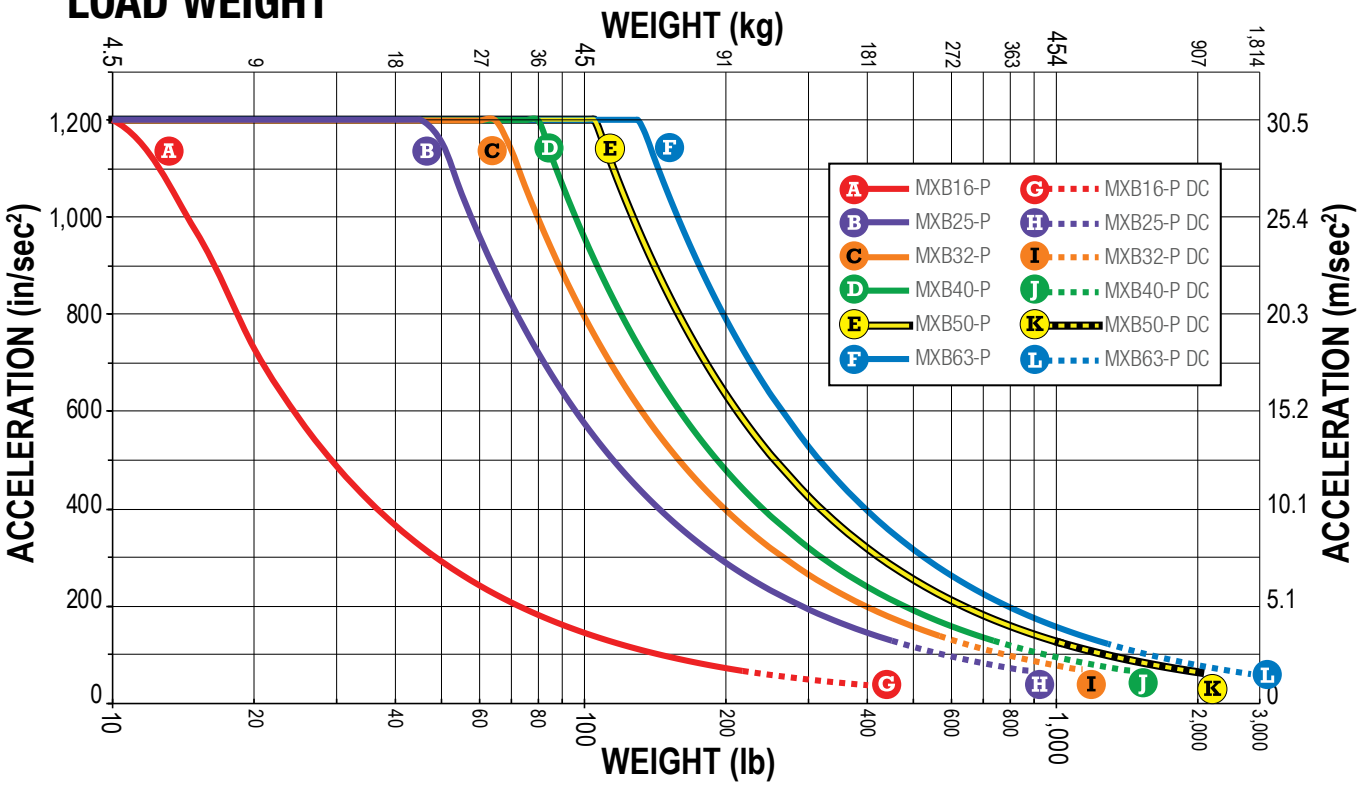

SPEED FACTOR

FOR APPLICATIONS WITH HIGH SPEED OR SIGNIFICANT SHOCK AND VIBRATION:
Calculated values of loads and bending moments must be increased by speed factor from the graph at right to obtain full rated life of profiled rail bearing system.

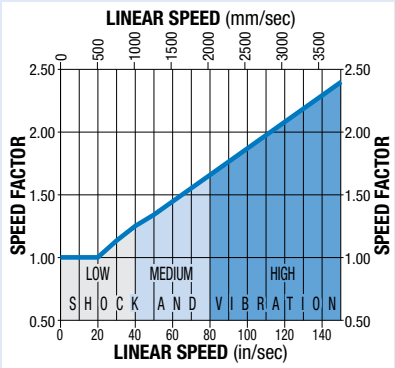

PROFILED RAIL LUBRICATION

Proper lubrication of profiled rail bearing system is essential for normal operation and achievement of full rated life of MX--P actuators. Lubrication should be performed at intervals of 101 km ($4x10^6$ in) of travel or once every year, whichever occurs first. **However, operating conditions such as high speed or significant shock and vibration may require more frequent lubrication.** Please consult Tolomatic for recommendations.

Recommended grease types:

1. Refined mineral oil-based multi-purpose grease with lithium thickening agent.
2. High-grade synthetic oil-based grease with urea thickening agent.

MXB-U Rodless Belt Drive Actuator

tolomatic.com/CAD **Download 3D CAD**
Always use CAD solid model to determine critical dimensions

ACTUATOR & OPTION DIMENSIONS

	MXB16	MXB25	MXB32	MXB40	MXB50	MXB63
A	135.3	173.9	187.8	216.6	224.7	275.1
B	119.0	139.3	154.7	192.7	205.0	262.1
C	50.8	58.0	55.9	78.7	82.6	96.1
D	25.4	29.0	25.4	39.4	40.0	45.3
E	3.8	4.4	4.4	4.4	4.4	4.4
F	52.8	66.0	77.5	93.8	110.6	139.3
G*	45.3	61.9	77.4	88.3	109.6	135.5
H	44.5	50.8	69.9	82.6	98.4	111.1
(LMI)J	15.0	57.7	57.7	47.5	47.5	47.5
(RP)J	46.6	57.7	57.7	47.5	47.5	47.5
K	Ø9.53	Ø12.70	Ø12.70	Ø12.70	Ø12.70	Ø12.70
L	26.4	29.2	27.9	39.7	41.5	52.2
N	34.9	54.0	63.5	88.9	95.3	114.3
O	110.0	135.0	170.0	200.0	216.0	304.8
P	40.0	40.0	27.1	25.4	25.4	40.0
Q	-	-	87.7	114.3	69.8	130.0
S	28.0	40.0	50.0	72.0	79.4	98.3
T	M4x0.7	M6x1.0	M8x1.25	M8x1.25	M8x1.25	M10x1.5
U*	17.5	27.0	31.8	44.5	47.7	57.2
V	30.00	42.00	55.37	64.00	78.74	100.00
OPTIONAL MOUNTING PLATES						
AA	15.9	15.9	19.1	25.4	31.8	25.4
BB	6.4	6.4	7.6	–	–	–
CC	68.7	81.9	96.5	119.4	119.4	164.6
DD	60.9	77.7	95.2	106.1	127.4	161.0
EE	60.0	63.5	86.4	127.0	142.2	203.2
FF	44.5	50.8	59.9	112.0	127.0	177.8
GG	25.4	25.4	25.4	20.1	20.1	25.4
HH	Ø5.6 THRU ⌴ Ø9.4 ↧ 5.6 (2)	Ø5.6 THRU ⌴ Ø9.4 ↧ 5.6 (2)	Ø7.1 THRU ⌴ Ø11.2 ↧ 7.1 (2)	Ø7.1 THRU (2)	Ø7.1 THRU (2)	Ø7.1 THRU (2)

Dimensions in millimeters

	MXB16	MXB25	MXB32	MXB40	MXB50	MXB63
A	5.33	6.85	7.39	8.53	8.85	10.83
B	4.69	5.49	6.09	7.59	8.07	10.33
C	2.00	2.28	2.20	3.10	3.25	3.79
D	1.00	1.14	1.00	1.55	1.58	1.79
E	0.15	0.17	0.17	0.17	0.17	0.17
F	2.08	2.60	3.05	3.69	4.35	5.48
G*	1.77	2.44	3.05	3.48	4.31	5.34
H	1.75	2.00	2.75	3.25	3.88	4.38
(LMI)J	0.59	2.27	2.27	1.87	1.87	1.87
(RP)J	1.83	2.27	2.27	1.87	1.87	1.87
K	Ø.375	Ø.500	Ø.500	Ø.500	Ø.500	Ø.500
L	1.04	1.15	1.10	1.56	1.63	2.06
N	1.38	2.13	2.50	3.50	3.75	4.50
O	4.33	5.31	6.69	7.87	8.50	12.00
P	1.57	1.57	1.07	1.00	1.00	1.57
Q	-	-	3.37	4.50	2.75	5.12
S	1.10	1.57	1.97	2.83	3.13	3.87
T	#8-32(6)	1/4-20(6)	5/16-18(8)	5/16-18(8)	5/16-18(8)	3/8-16(8)
U*	0.69	1.07	1.25	1.75	1.88	2.25
V	1.18	1.65	2.18	2.52	3.10	3.94
OPTIONAL MOUNTING PLATES						
AA	0.63	0.63	0.75	1.00	1.25	1.00
BB	0.25	0.25	0.30	–	–	–
CC	2.71	3.22	3.80	4.70	5.60	6.48
DD	2.4	3.06	3.75	4.18	5.01	6.34
EE	2.36	2.50	3.40	5.00	5.60	8.00
FF	1.75	2.00	2.75	4.41	5.00	7.00
GG	1.00	1.00	1.00	0.79	0.79	1.00
HH	Ø.22 THRU ⌴ Ø.37 ↧ .22 (2)	Ø.22 THRU ⌴ Ø.37 ↧ .22 (2)	Ø.28 THRU ⌴ Ø.44 ↧ .28 (2)	Ø.28 THRU (2)	Ø.28 THRU (2)	Ø.28 THRU (2)

Dimensions in inches

OPTIONAL TUBE CLAMPS

	MXB16	MXB25	MXB32	MXB40	MXB50	MXB63
JJ	-	57.0	74.1	82.7	97.5	131.7
KK	-	69.0	87.4	96.7	111.5	150.7
LL	-	18.0	16.0	14.0	14.0	19.0
MM	-	3.6	4.3	3.8	3.8	6.1
NN	-	5.2	7.1	7.1	7.1	10.7

Dimensions in millimeters

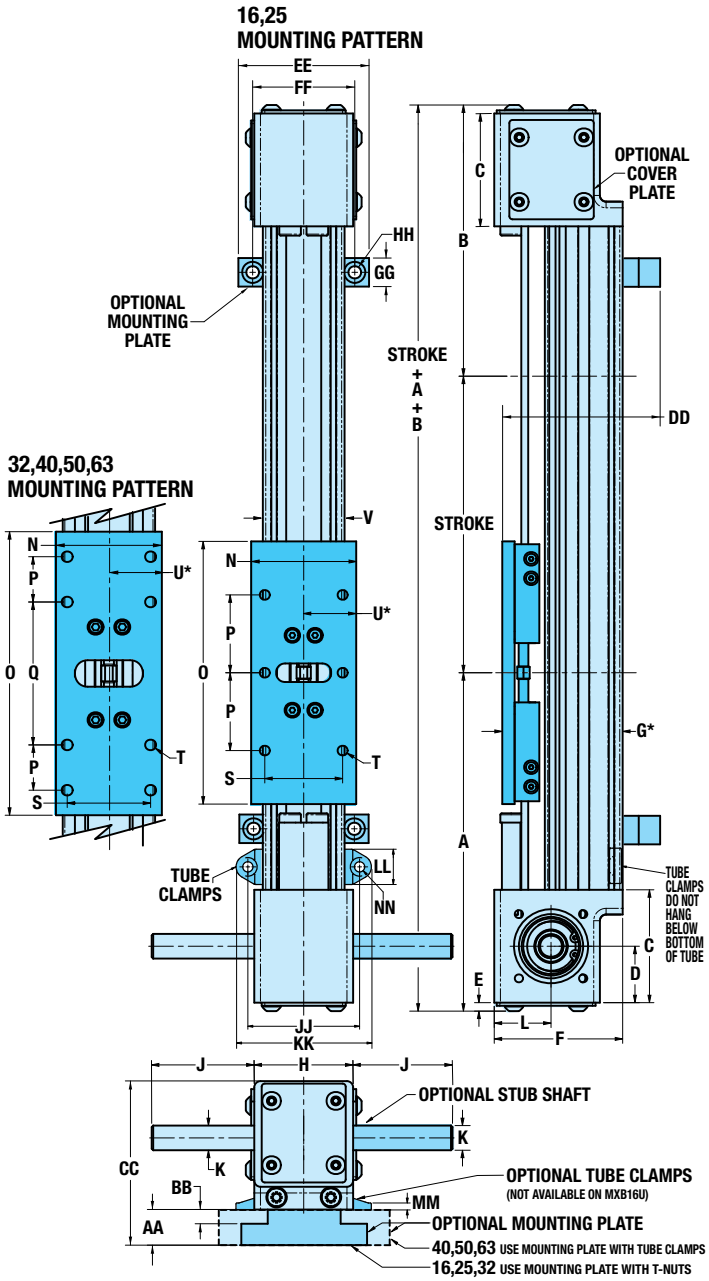

⚠ *In order for the actuator to operate properly, dimensions "G" and "U" must not vary more than 0.51mm *[±0.020 in]* over the entire length of the stroke.

	MXB16	MXB25	MXB32	MXB40	MXB50	MXB63
JJ	-	2.24	2.92	3.26	3.84	5.19
KK	-	2.72	3.44	3.81	4.39	5.93
LL	-	0.71	0.63	0.55	0.55	0.75
MM	-	0.14	0.17	0.15	0.15	0.24
NN	-	0.20	0.28	0.28	0.28	0.42

Dimensions in inches

SOLID BEARING DIMENSIONS

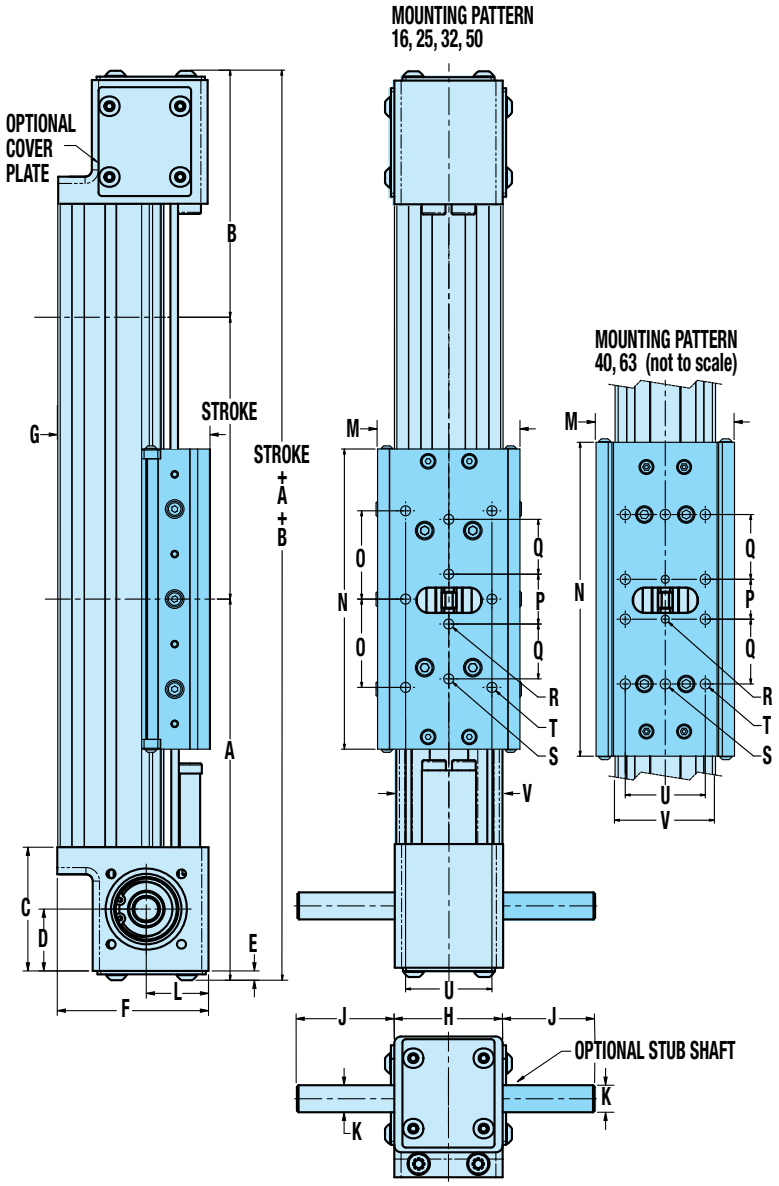

	MXB16	MXB25	MXB32	MXB40	MXB50	MXB63
A	135.3	173.9	179.3	216.6	217.8	275.1
B	119.0	139.3	163.2	192.7	212.0	262.1
C	50.8	58.0	55.9	78.7	82.6	96.1
D	25.4	29.0	25.4	39.4	40.0	45.3
E	3.8	4.4	4.4	4.4	4.4	4.4
F	52.8	66.0	77.5	93.8	110.6	139.3
G*	45.8	58.4	77.8	89.2	112.8	139.7
H	44.5	50.8	69.9	82.6	98.4	111.1
(LMI) J	15.0	57.7	57.7	47.5	47.5	47.5
(RP) J	46.6	57.7	57.7	47.5	47.5	47.5
K	Ø9.53	Ø12.70	Ø12.70	Ø12.70	Ø12.70	Ø12.70
L	26.4	29.2	27.9	39.7	41.5	52.2
M	40.1	55.4	72.6	88.2	104.1	142
N	110.0	134.9	153	200	200.9	307.6
O	30	39.9	45	-	47.8	-
P	-	25.4	25.4	25.4	63.5	76.2
Q	-	27.2	28	41.3	31.8	38.1
R	-	M6x1.0 (2)	M8x1.25 (2)	M8x1.25 (2)	M10x1.5 (2)	M10x1.5 (2)
S	-	M6x1.0 (2)	M8x1.25 (2)	M8x1.25 (2)	M10x1.5 (2)	M10x1.5 (2)
T	M4x0.7 (6)	M6x1.0 (6)	M8x1.25 (6)	M8x1.25 (8)	M10x1.5 (6)	M10x1.5 (8)
U*	30.0	30.0	44.0	51.0	65.8	82.6
V	30.00	42.00	55.37	64.00	78.74	100.00

Dimensions in millimeters

	MXB16	MXB25	MXB32	MXB40	MXB50	MXB63
A	*5.33*	*6.85*	*7.06*	*8.53*	*8.57*	*10.83*
B	*4.69*	*5.49*	*6.43*	*7.59*	*8.34*	*10.33*
C	*2.00*	*2.28*	*2.20*	*3.10*	*3.25*	*3.79*
D	*1.00*	*1.14*	*1.00*	*1.55*	*1.58*	*1.79*
E	*0.15*	*0.17*	*0.17*	*0.17*	*0.17*	*0.17*
F	*2.08*	*2.60*	*3.05*	*3.69*	*4.35*	*5.48*
G*	*1.80*	*2.30*	*3.06*	*3.51*	*4.44*	*5.50*
H	*1.75*	*2.00*	*2.75*	*3.25*	*3.88*	*4.38*
(LMI) J	*0.59*	*2.27*	*2.27*	*1.87*	*1.87*	*1.87*
(RP) J	*1.83*	*2.27*	*2.27*	*1.87*	*1.87*	*1.87*
K	*Ø.375*	*Ø.500*	*Ø.500*	*Ø.500*	*Ø.500*	*Ø.500*
L	*1.04*	*1.15*	*1.10*	*1.56*	*1.63*	*2.06*
M	*1.58*	*2.18*	*2.86*	*3.47*	*4.1*	*5.59*
N	*4.33*	*5.31*	*6.02*	*7.87*	*7.91*	*12.11*
O	*1.18*	*1.57*	*1.77*	-	*1.88*	-
P	-	*1.00*	*1.00*	*1.00*	*2.50*	*3.00*
Q	-	*1.07*	*1.10*	*1.63*	*1.25*	*1.50*
R	-	*1/4-20 (2)*	*1/4-20 (2)*	*1/4-20 (2)*	*3/8-16 (2)*	*3/8-16 (2)*
S	-	*#10-32 (2)*	*1/4-20 (2)*	*5/16-18 (2)*	*3/8-16 (2)*	*3/8-16 (2)*
T	*#8-32 (6)*	*1/4-20 (6)*	*1/4-20 (6)*	*5/16-18 (8)*	*3/8-16 (6)*	*3/8-16 (8)*
U*	*1.18*	*1.18*	*1.73*	*2.00*	*2.59*	*3.25*
V	*1.18*	*1.65*	*2.18*	*2.52*	*3.10*	*3.94*

Dimensions in inches

SOLID BEARING OPTION DIMENSIONS

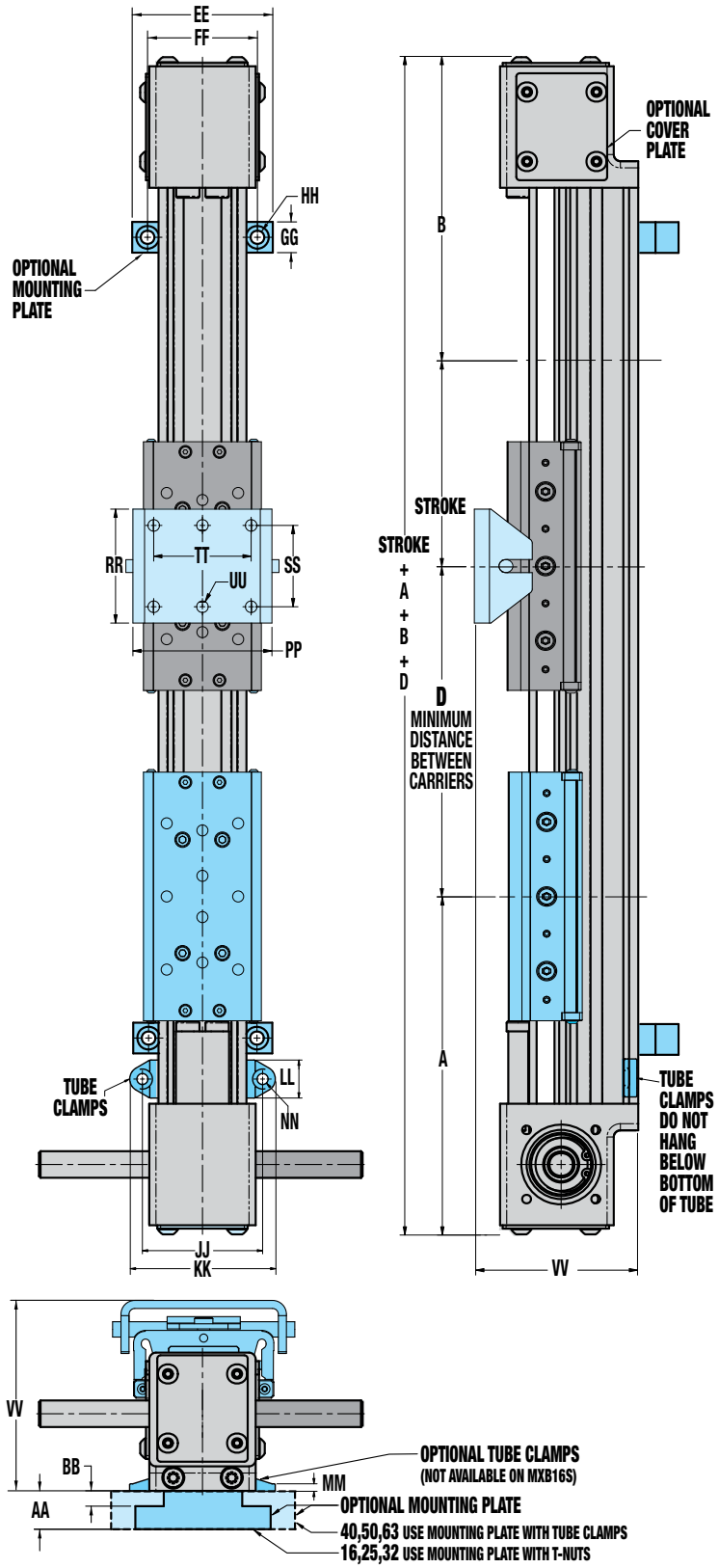

	MXB16	MXB25	MXB32	MXB40	MXB50	MXB63
A	135.3	173.9	179.3	216.6	217.8	275.1
B	119.0	139.3	163.2	192.7	212.0	262.1
D	127.0	152.4	177.0	215.9	216.4	330.2
OPTIONAL MOUNTING PLATES						
AA	15.9	15.9	19.1	25.4	31.8	25.4
BB	6.4	6.4	7.6	–	–	–
DD	60.9	77.7	95.2	106.1	127.4	153.3
EE	60.0	63.5	86.4	127.0	142.2	203.2
FF	44.5	50.8	59.9	112.0	127.0	177.8
GG	25.4	25.4	25.4	20.1	20.1	25.4
HH	Ø5.6 THRU ⌴ Ø9.4 ↧ 5.6 (2)	Ø5.6 THRU ⌴ Ø9.4 ↧ 5.6 (2)	Ø7.1 THRU ⌴ Ø11.2 ↧ 7.1 (2)	Ø7.1 THRU (2)	Ø7.1 THRU (2)	Ø7.1 THRU (2)
OPTIONAL TUBE CLAMPS						
JJ	-	57.0	74.1	82.7	97.5	131.7
KK	-	69.0	87.4	96.7	111.5	150.7
LL	-	18.0	16.0	14.0	14.0	19.0
MM	-	3.6	4.3	3.8	3.8	6.1
NN	-	5.2	7.1	7.1	7.1	10.7
OPTIONAL FLOATING MOUNT						
PP	47.2	64.1	93.3	109.7	128.0	154.9
RR	24.9	31.8	70.1	100.0	100.0	127.0
SS	11.9	15.9	50.0	74.9	80.0	100.1
TT	-	-	-	55.1	-	70.1
UU	Ø4.6 (2)	Ø6.1 (2)	Ø7.1 (2)	Ø7.1 (4)	Ø9.1 (2)	Ø8.6 (4)
VV	58.5	70.9	93.3	108.2	133.1	156.8

Dimensions in millimeters

	MXB16	MXB25	MXB32	MXB40	MXB50	MXB63
A	*5.33*	*6.85*	*7.06*	*8.53*	*8.57*	*10.83*
B	*4.69*	*5.49*	*6.43*	*7.59*	*8.34*	*10.33*
D	*5.00*	*6.00*	*7.00*	*8.50*	*8.60*	*13.00*
OPTIONAL MOUNTING PLATES						
AA	*0.63*	*0.63*	*0.75*	*1.00*	*1.25*	*1.00*
BB	*0.25*	*0.25*	*0.30*	–	–	–
DD	*2.4*	*3.06*	*3.75*	*4.18*	*5.01*	*6.04*
EE	*2.36*	*2.50*	*3.40*	*5.00*	*5.60*	*8.00*
FF	*1.75*	*2.00*	*2.75*	*4.41*	*5.00*	*7.00*
GG	*1.00*	*1.00*	*1.00*	*0.79*	*0.79*	*1.00*
HH	*Ø.22 THRU ⌴ Ø.37 ↧ .22 (2)*	*Ø.22 THRU ⌴ Ø.37 ↧ .22 (2)*	*Ø.28 THRU ⌴ Ø.44 ↧ .28 (2)*	*Ø.28 THRU (2)*	*Ø.28 THRU (2)*	*Ø.28 THRU (2)*
OPTIONAL TUBE CLAMPS						
JJ	-	*2.24*	*2.92*	*3.26*	*3.84*	*5.19*
KK	-	*2.72*	*3.44*	*3.81*	*4.39*	*5.93*
LL	-	*0.71*	*0.63*	*0.55*	*0.55*	*0.75*
MM	-	*0.14*	*0.17*	*0.15*	*0.15*	*0.24*
NN	-	*0.20*	*0.28*	*0.28*	*0.28*	*0.42*
OPTIONAL FLOATING MOUNT						
PP	*1.86*	*2.52*	*3.37*	*4.32*	*5.04*	*6.10*
RR	*0.98*	*1.25*	*2.76*	*3.94*	*3.94*	*5.00*
SS	*0.47*	*0.63*	*1.97*	*2.95*	*3.15*	*3.94*
TT	-	-	-	*2.17*	-	*2.76*
UU	*Ø.18 (2)*	*Ø.24 (2)*	*Ø.28 (2)*	*Ø.28 (4)*	*Ø.36 (2)*	*Ø.34 (4)*
VV	*2.30*	*2.79*	*3.67*	*4.26*	*5.24*	*6.18*

Dimensions in inches

PROFILED RAIL BEARING DIMENSIONS

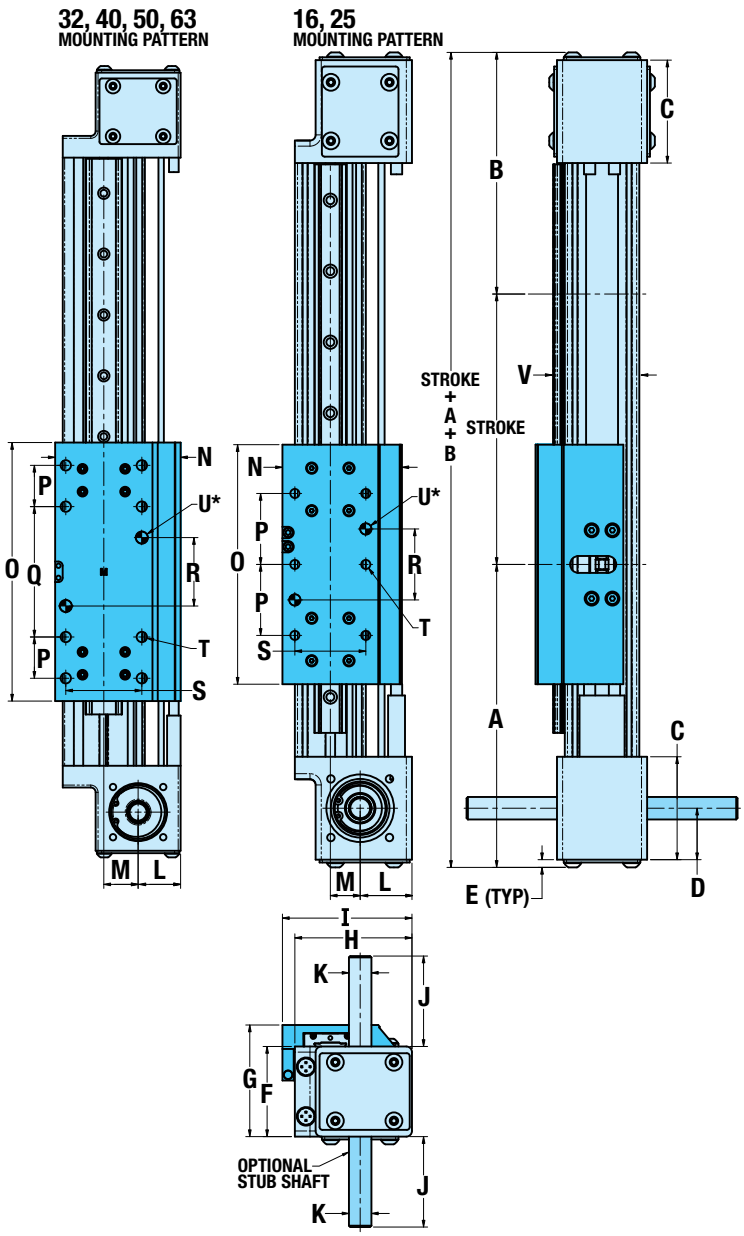

	MXB16	MXB25	MXB32	MXB40	MXB50	MXB63
A	135.3	173.9	187.8	216.6	224.7	275.1
B	119.0	139.3	154.7	192.7	205.0	262.1
C	50.8	58.0	55.9	78.7	82.6	96.1
D	25.4	29.0	25.4	39.4	40.0	45.3
E	3.8	4.4	4.4	4.4	4.4	4.4
F	44.5	50.8	69.9	82.6	98.4	111.1
G	53.2	62.9	84.6	98.7	129.6	145.6
H	52.8	66.0	77.5	93.8	110.6	139.3
I	54.8	73.0	82.5	103.9	117.9	147.1
(LMI)J	15.0	57.7	57.7	47.5	47.5	47.5
(RP)J	46.6	57.7	57.7	47.5	47.5	47.5
K	Ø9.53	Ø12.70	Ø12.70	Ø12.70	Ø12.70	Ø12.70
L	26.4	29.2	27.9	39.7	41.5	52.2
M	11.4	16.8	22.6	22.2	29.8	37.1
N	45.3	67.4	82.5	97.8	117.4	150.6
O	110.0	135.0	170.0	200.0	216.0	304.8
P	40.0	40.0	27.1	25.4	25.4	40.0
Q	—	—	85.7	114.3	69.8	130.0
R	40.00	40.00	45.00	63.50	38.10	65.00
S	28.00	40.00	50.00	72.00	79.38	98.30
T	M4x0.7	M6x1.0	M8x1.25	M8x1.25	M8x1.25	M10x1.5
U*	Ø4.045 / 4.020 ↧6.35	Ø6.045 / 6.020 ↧6.35	Ø8.045 /8.020 ↧9.53	Ø8.045 /8.020 ↧12.70	Ø8.045 /8.020 ↧12.70	Ø10.045 /10.020 ↧12.70
V	35.50	48.60	62.87	73.50	93.74	115.00

Dimensions in millimeters

	MXB16	MXB25	MXB32	MXB40	MXB50	MXB63
A	*5.33*	*6.85*	*7.39*	*8.53*	*8.85*	*10.83*
B	*4.69*	*5.49*	*6.09*	*7.59*	*8.07*	*10.33*
C	*2.00*	*2.28*	*2.20*	*3.10*	*3.25*	*3.79*
D	*1.00*	*1.14*	*1.00*	*1.55*	*1.58*	*1.79*
E	*0.15*	*0.17*	*0.17*	*0.17*	*0.17*	*0.17*
F	*1.75*	*2.00*	*2.75*	*3.25*	*3.88*	*4.38*
G	*2.10*	*2.48*	*3.33*	*3.88*	*5.10*	*5.73*
H	*2.08*	*2.60*	*3.05*	*3.69*	*4.35*	*5.48*
I	*2.16*	*2.87*	*3.25*	*4.09*	*4.64*	*5.79*
(LMI)J	*0.59*	*2.27*	*2.27*	*1.87*	*1.87*	*1.87*
(RP)J	*1.83*	*2.27*	*2.27*	*1.87*	*1.87*	*1.87*
K	*Ø.375*	*Ø.500*	*Ø.500*	*Ø.500*	*Ø.500*	*Ø.500*
L	*1.04*	*1.15*	*1.10*	*1.56*	*1.63*	*2.06*
M	*0.45*	*0.66*	*0.89*	*0.87*	*1.17*	*1.46*
N	*1.78*	*2.65*	*3.25*	*3.85*	*4.62*	*5.93*
O	*4.33*	*5.31*	*6.69*	*7.87*	*8.50*	*12.00*
P	*1.57*	*1.57*	*1.07*	*1.00*	*1.00*	*1.57*
Q	—	—	*3.37*	*4.50*	*2.75*	*5.12*
R	*1.575*	*1.575*	*1.772*	*2.500*	*1.500*	*2.559*
S	*1.102*	*1.575*	*1.969*	*2.835*	*3.125*	*3.870*
T	*#8-32(6)*	*1/4-20(6)*	*5/16-18(8)*	*5/16-18(8)*	*5/16-18(8)*	*3/8-16(8)*
U*	*Ø.1583 / .1573 (2) ↧.250*	*Ø.2520 / .2510 (2) ↧.250*	*Ø.3145 / .3135 (2) ↧.375*	*Ø.3145 / .3135 (2) ↧.500*	*Ø.3145 / .3135 (2) ↧.500*	*Ø.3770 / .3760 (2) ↧.500*
V	*1.40*	*1.91*	*2.48*	*2.89*	*3.69*	*4.53*

Dimensions in inches

*DOWEL HOLES

⌖	0.08 mm Ⓜ
⌖	0.003 in Ⓜ

PROFILED RAIL BEARING OPTION DIMENSIONS

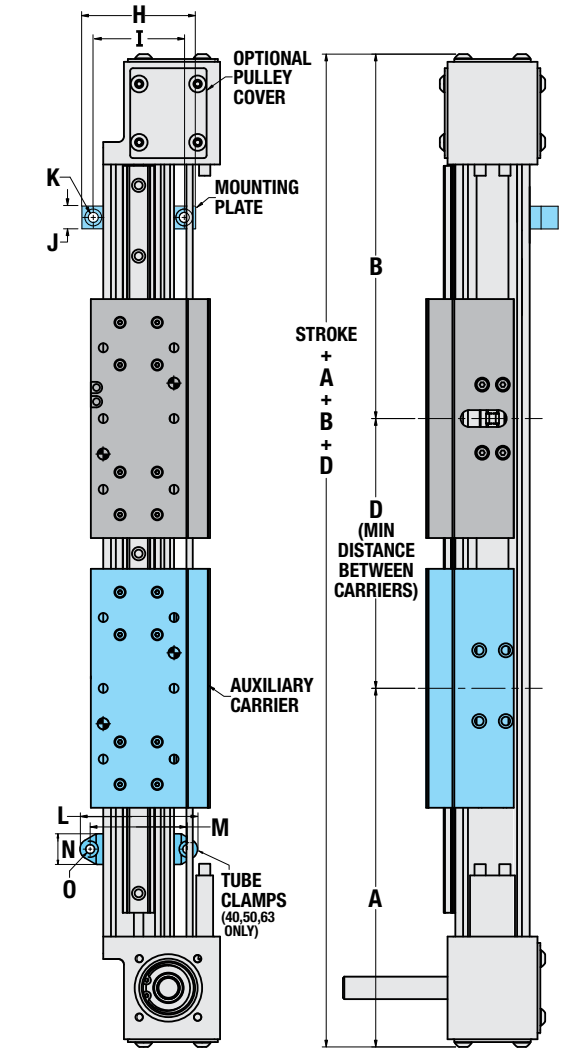

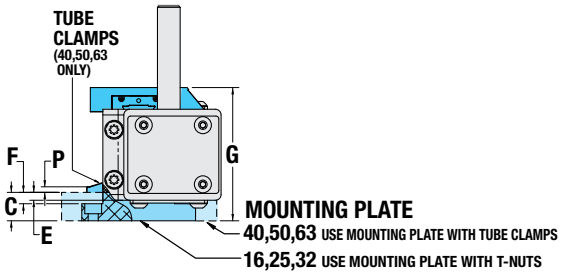

	MXB16	MXB25	MXB32	MXB40	MXB50	MXB63
A	135.3	173.9	187.8	216.6	224.7	275.1
B	119.0	139.3	154.7	192.7	205.0	262.1
AUXILIARY CARRIER						
D	127.0	152.4	177.0	215.9	216.4	330.2
MOUNTING PLATE						
C	15.9	15.9	19.1	25.4	31.8	25.4
E	7.2	4.4	7.2	9.3	9.8	5.6
F	6.4	6.4	7.6	–	–	–
G	61.9	74.4	96.5	114.8	151.4	165.4
H	60.0	63.5	86.4	127.0	142.2	203.2
I	44.5	50.8	69.9	112.0	127.0	177.8
J	25.4	25.4	25.4	20.1	20.1	25.4
K	Ø5.6 THRU ⌴ Ø9.4 ↧ 5.6 (2)	Ø5.6 THRU ⌴ Ø9.4 ↧ 5.6 (2)	Ø7.1 THRU ⌴ Ø11.2 ↧ 7.1 (2)	Ø7.1 THRU (2)	Ø7.1 THRU (2)	Ø7.1 THRU (2)
TUBE CLAMPS						
L	–	–	–	96.8	111.5	150.6
M	–	–	–	82.8	97.5	131.8
N	–	–	–	14.0	14.0	19.1
O	–	–	–	7.1	7.1	10.7
P	–	–	–	3.8	3.8	6.1

Dimensions in millimeters

	MXB16	MXB25	MXB32	MXB40	MXB50	MXB63
A	*5.33*	*6.85*	*7.39*	*8.53*	*8.85*	*10.83*
B	*4.69*	*5.49*	*6.09*	*7.59*	*8.07*	*10.33*
AUXILIARY CARRIER						
D	*5.00*	*6.00*	*7.00*	*8.50*	*8.60*	*13.00*
MOUNTING PLATE						
C	*0.63*	*0.63*	*0.75*	*1.00*	*1.25*	*1.00*
E	*0.28*	*0.17*	*0.29*	*0.37*	*0.39*	*0.22*
F	*0.25*	*0.25*	*0.30*	–	–	–
G	*2.44*	*2.93*	*3.80*	*4.52*	*5.96*	*6.51*
H	*2.36*	*2.50*	*3.40*	*5.00*	*5.60*	*8.00*
I	*1.75*	*2.00*	*2.75*	*4.41*	*5.00*	*7.00*
J	*1.00*	*1.00*	*1.00*	*0.79*	*0.79*	*1.00*
K	*Ø.22 THRU ⌴ Ø.37 ↧ .22 (2)*	*Ø.22 THRU ⌴ Ø.37↧ .22 (2)*	*Ø.28 THRU ⌴ Ø.44↧ .28 (2)*	*Ø.28 THRU (2)*	*Ø.28 THRU (2)*	*Ø.28 THRU (2)*
TUBE CLAMPS						
L	–	–	–	*3.81*	*4.39*	*5.93*
M	–	–	–	*3.26*	*3.84*	*5.19*
N	–	–	–	*0.55*	*0.55*	*0.75*
O	–	–	–	*0.28*	*0.28*	*0.42*
P	–	–	–	*0.15*	*0.15*	*0.24*

Dimensions in inches

DIRECT DRIVE MOTOR MOUNTING

MXB-U

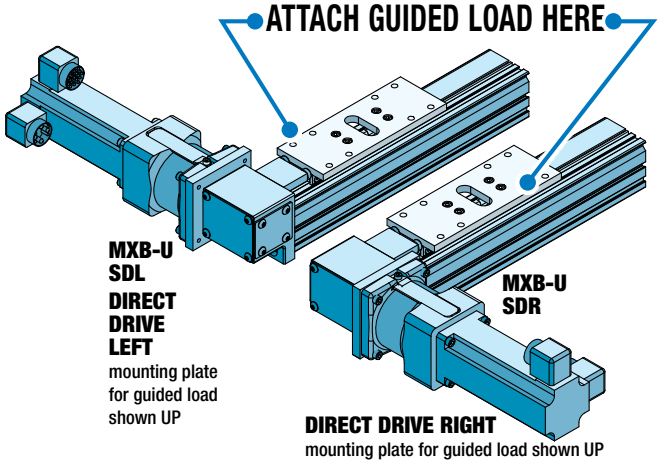

MXB-S

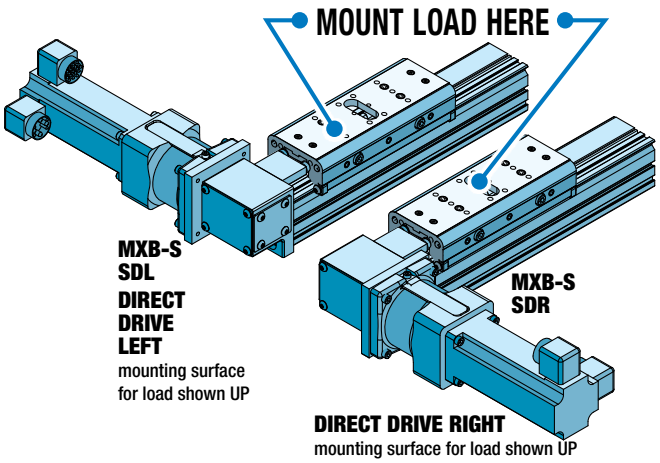

MXB-P

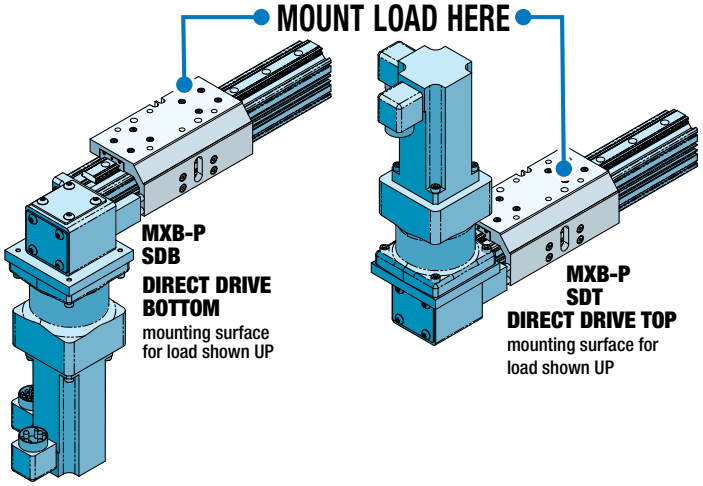

MOTOR MOUNTING

The MXB-P is unique among Tolomatic belt drive actuators. The mounting surface of the carrier is located 90° from the motion of the belt. The side opposite the belt is reserved for switch placement. The bottom of the actuator is reserved for mounting. If the motor is mounted in the SDT (direct drive top orientation), be sure the load mounted to the carrier does not interfere with the motor.

LARGE FRAME MOTORS AND SMALLER SIZE ACTUATORS: Cantilevered motors need to be supported if subjected to continuous rapid reversing duty and/or under dynamic conditions.

REDUCTION DRIVE MOTOR MOUNTING

MXB-U

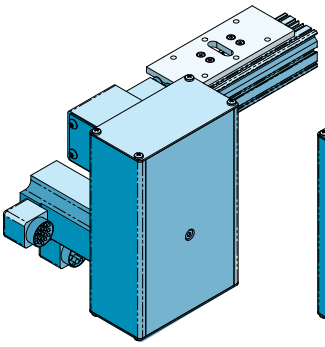

REDUCTION DRIVE BOTTOM LEFT (SDBL)
mounting plate for guided load shown UP

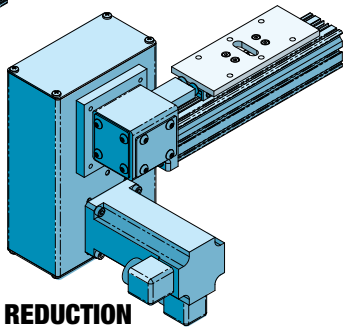

REDUCTION DRIVE BOTTOM RIGHT (SDBR)
mounting plate for guided load shown UP

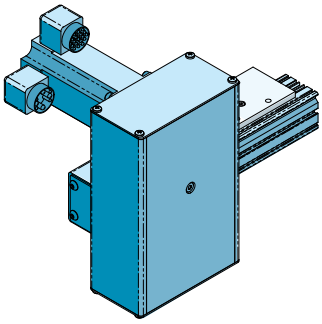

REDUCTION DRIVE TOP LEFT (SDTL)
mounting plate for guided load shown UP

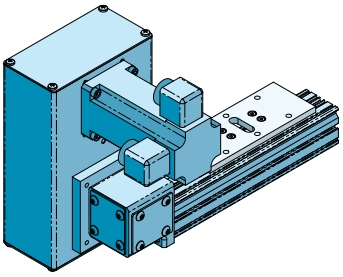

REDUCTION DRIVE TOP RIGHT (SDTR)
mounting plate for guided load shown UP

MXB-S

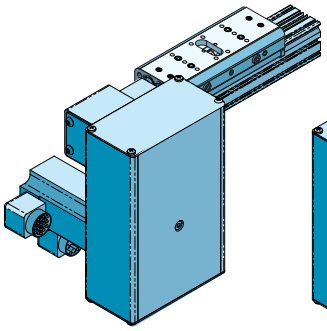

REDUCTION DRIVE BOTTOM LEFT (SDBL)
mounting surface for load shown UP

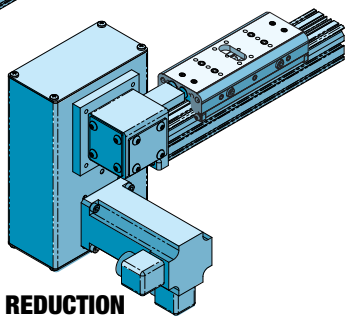

REDUCTION DRIVE BOTTOM RIGHT (SDBR)
mounting surface for load shown UP

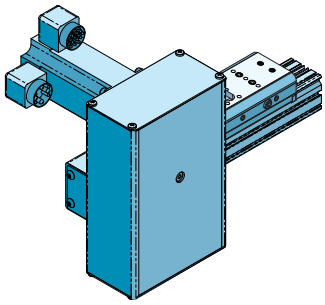

REDUCTION DRIVE TOP LEFT (SDTL)
mounting surface for load shown UP

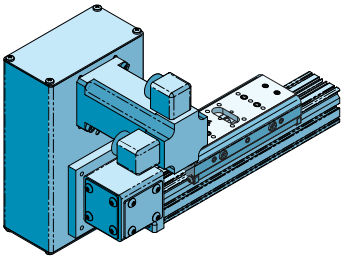

REDUCTION DRIVE TOP RIGHT (SDTR)
mounting surface for load shown UP

MXB-P

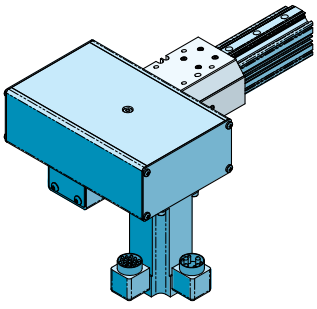

REDUCTION DRIVE RIGHT BOTTOM (SDRB)
mounting surface for load shown UP

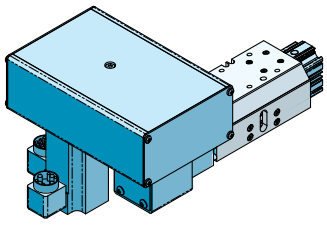

REDUCTION DRIVE LEFT BOTTOM (SDLB)
mounting surface for load shown UP

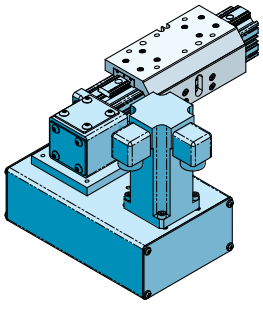

REDUCTION DRIVE RIGHT TOP (SDRT)
mounting surface for load shown UP

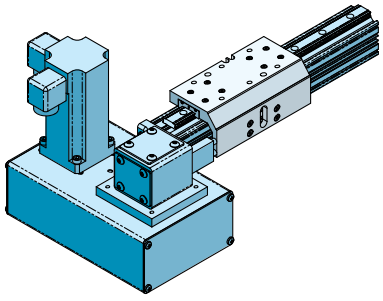

REDUCTION DRIVE LEFT TOP (SDLT)
mounting surface for load shown UP

See tolomatic.com for 3D solid model(s) with motor mounting dimensions

SWITCHES

SPECIFICATIONS



RoHS COMPLIANT CE

MX products offer a wide range of sensing choices. There are 12 switch choices: reed, solid state PNP (sourcing) or solid state NPN (sinking); in normally open or normally closed; with flying leads or quick-disconnect.

Commonly used for end-of-stroke positioning, these switches allow drop-in installation anywhere along the entire actuator length. The one-piece design includes the retained fastening hardware. The magnet and magnet hardware are located on the carrier. See the dimensional drawings on page MXB_27 for details of magnet and switch locations. Switches and magnets can be installed in the field at any time.

Switches are used to send digital signals to PLC (programmable logic controller), TTL, CMOS circuit or other controller device. Switches contain reverse polarity protection. Solid state QD cables are shielded; shield should be terminated at flying lead end.

All switches are CE rated and are RoHS compliant. Switches feature bright red or yellow LED signal indicators; solid state switches also have green LED power indicators.

	Order Code	Lead	Switching Logic	Power LED	Signal LED	Operating Voltage	**Power Rating (Watts)	Switching Current (mA max.)	Current Consumption	Voltage Drop	Leakage Current	Temp. Range	Shock / Vibration
REED	RY	5m	SPST Normally Open	—	Red	5 - 240 AC/DC	**10.0	100mA	—	3.0 V max.	—	14 to 158°F [-10 to 70°C]	50 G / 9 G
	RK	QD*		Tolomatic 81009082									
	NY	5m	SPST Normally Closed	—	Yellow	5 - 110 AC/DC							
	NK	QD*		Tolomatic 81009084									
SOLID STATE	TY	5m	PNP (Sourcing) Normally Open	Green	Yellow	10 - 30 VDC	**3.0	100mA	20 mA @ 24V	2.0 V max.	0.05 mA max.		
	TK	QD*		Tolomatic 81009088									
	KY	5m	NPN (Sinking) Normally Open	Green	Red								
	KK	QD*		Tolomatic 81009090									
	PY	5m	PNP (Sourcing) Normally Closed	Green	Yellow								
	PK	QD*		Tolomatic 81009092									
	HY	5m	NPN (Sinking) Normally Closed	Green	Red								
	HK	QD*		Tolomatic 81009094									

*QD = Quick-disconnect Enclosure classification IEC 529 IP67 (NEMA 6) CABLES: Robotic grade, oil resistant polyurethane jacket, PVC insulation

⚠**WARNING: Do not exceed power rating (Watt = Voltage x Amperage). Permanent damage to sensor will occur.

SWITCH INSTALLATION AND REPLACEMENT

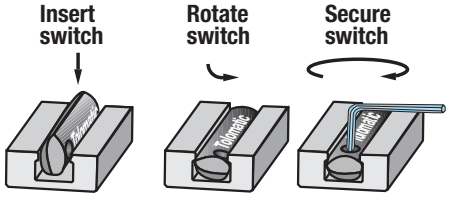

Place switch in side groove on tube at desired location with "Tolomatic" facing outward. While applying light pressure to the switch, rotate the switch halfway into the groove. Maintaining light pressure, rotate the switch in the opposite direction until it is fully inside the groove with "Tolomatic" visible. Re-position the switch to the exact location and lock the switch securely into place by tightening the screw on the switch.

SWITCHES

WIRING DIAGRAMS

RY • RK
REED • NORMALLY OPEN

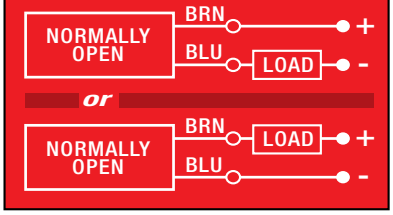

TY • TK
SOLID STATE • NORMALLY OPEN • PNP

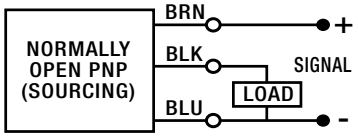

KY • KK
SOLID STATE • NORMALLY OPEN • NPN

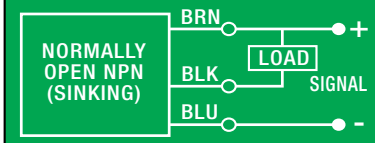

NY • NK
REED • NORMALLY CLOSED

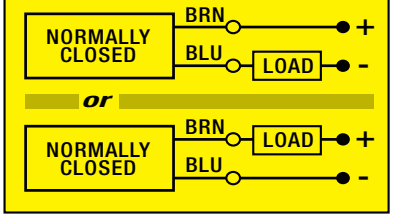

PY • PK
SOLID STATE • NORMALLY CLOSED • PNP

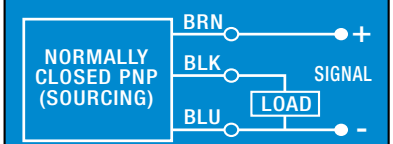

HY • HK
SOLID STATE • NORMALLY CLOSED • NPN

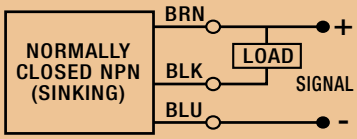

QUICK DISCONNECT MALE PLUG PINOUT

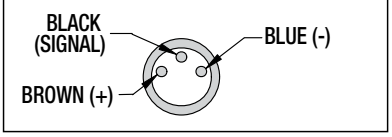

QUICK DISCONNECT FEMALE SOCKET PINOUT

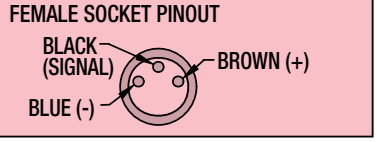

MOUNTING DIMENSIONS

MXB-U

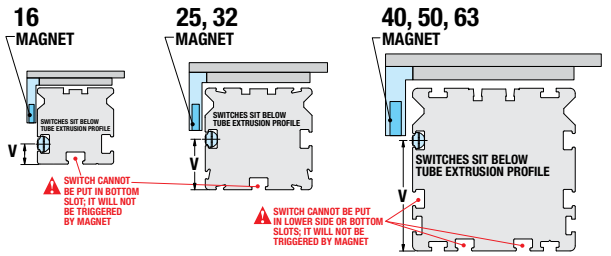

MXB-S

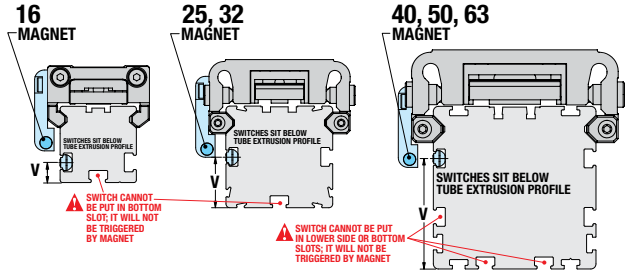

MXB-P

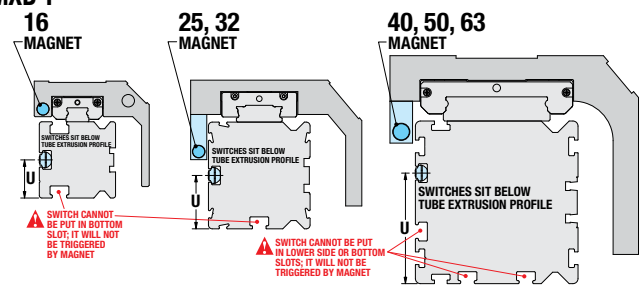

SWITCH DIMENSIONS

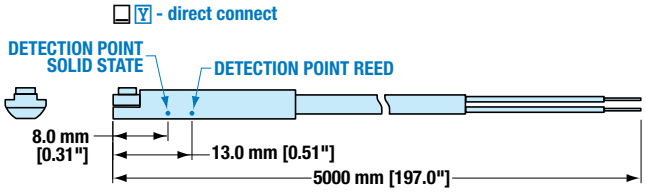

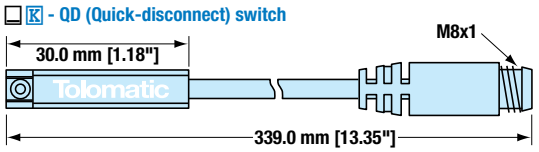

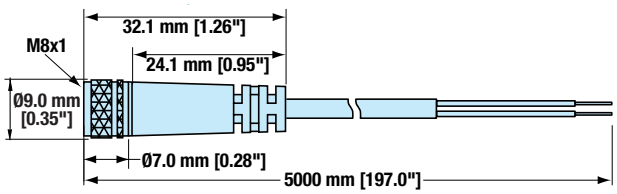

SWITCH MOUNTING

mm	MXB16	MXB25	MXB32	MXB40	MXB50	MXB63
U	15.0	21.0	27.7	43.5	51.4	62.0
V	7.9	20.0	27.0	43.5	51.4	62.0
in	MXB16	MXB25	MXB32	MXB40	MXB50	MXB63
U	*0.59*	*0.83*	*1.09*	*1.71*	*2.02*	*2.44*
V	*0.31*	*0.79*	*1.06*	*1.71*	*2.02*	*2.44*

⚠ NOTE: When ordering switches as a service part, Magnet Housing Kit (light blue in drawings) is required if actuator was not originally ordered with switches.

COMPILE APPLICATION REQUIREMENTS

APPLICATION DATA WORKSHEET

Fill in known data. Not all information is required for all applications

ORIENTATION

☐ Horizontal

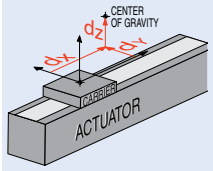

☐ Side

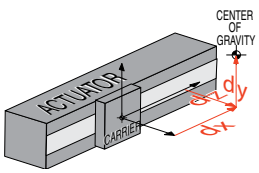

☐ Horizontal Down

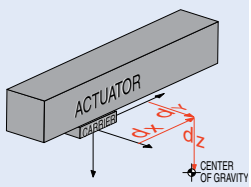

☐ Vertical

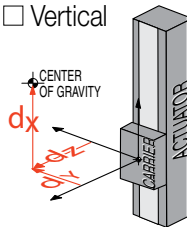

☐ Angled °

α _____

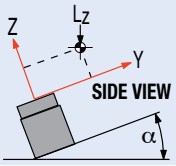

β _____

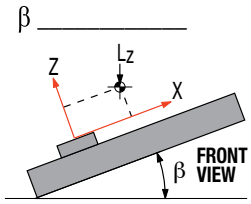

☐ Load attached to carrier OR ☐ Load supported by other mechanism

DISTANCE FROM CENTER OF CARRIER TO LOAD CENTER OF GRAVITY

d_x _____
d_y _____
d_z _____

☐ inch (U.S. Standard) ☐ millimeter (Metric)

STROKE LENGTH _____

☐ inch (S K) (U.S. Standard) ☐ millimeters (Metric)

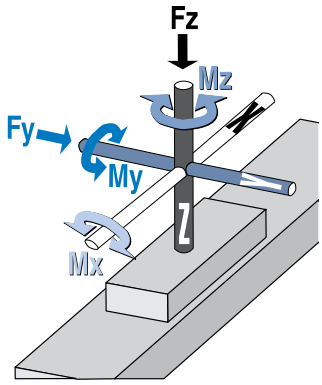

BENDING MOMENTS APPLIED TO CARRIER

M_x _____
M_y _____
M_z _____

☐ in.-lbs. (U.S. Standard) ☐ N-m (Metric)

PRECISION

Repeatability _____

☐ inch ☐ millimeters

⚠ NOTE: If load or force on carrier changes during cycle use the highest numbers for calculations

LOAD _____

☐ lb. (U.S. Standard) ☐ kg. (Metric)

THRUST REQUIRED

F_z _____
F_y _____

☐ lbf. (U.S. Standard) ☐ N (Metric)

OPERATING ENVIRONMENT

Temperature, Contamination, etc.

_____
_____
_____

☐

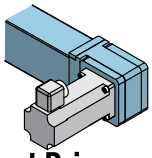

Direct Drive

☐

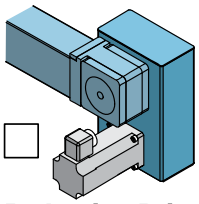

Reduction Drive

MOVE PROFILE

Move Distance _____

☐ inch ☐ millimeters

Dwell Time After Move_____

Max. Speed _____

☐ in/sec ☐ mm/sec

MOVE TIME _____

☐ sec

NO. OF CYCLES _____

☐ per minute ☐ per hour

MOTION PROFILE

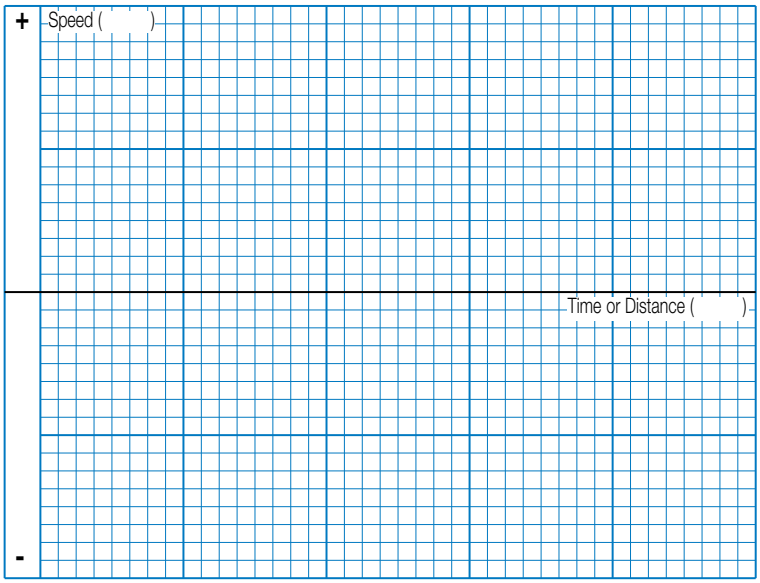

Graph your most demanding cycle, including accel/decel, velocity and dwell times. You may also want to indicate load variations and I/O changes during the cycle. Label axes with proper scale and units.

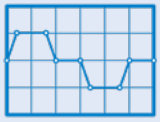

USE THE TOLOMATIC SIZING AND SELECTION SOFTWARE AVAILABLE ON-LINE AT www.tolomatic.com OR... CALL TOLOMATIC 1-800-328-2174 with the above information. We will provide any assistance needed to determine the proper MX actuator for the job. **FAX 1-763-478-8080**

CONTACT INFORMATION

Name, Phone, Email
Co. Name, Etc.

_____
_____
_____

SELECTION GUIDELINES

The process of selecting a belt drive actuator for a given application can be complex. It is highly recommended that you contact Tolomatic or a Tolomatic distributor for assistance in selecting the best actuator for your application. The following overview of the selection guidelines are for educational purposes only.

1 CHOOSE ACTUATOR SIZE

Choose an actuator that has the thrust, speed and moment load capacity to move the load.

A) For maximum thrust use the table below.

B) Max. speed of MXB-U 200 in/sec (5 m/sec); Max. speed of MXB-S 100 in/sec (2.5 m/sec) Max. speed of MXB-P 150 in/sec (3.8 m/sec).

C) For MXB-S moment and load capacities see tables on page MXB_12, 13. For MXB-P moment and load capacities see tables on page MXB_14, 15.

SIZE	MAXIMUM THRUST	
	lbf	N
16	38	*169*
25	151	*672*
32	209	*930*
40	250	*1112*
50	325	*1446*
63	418	*1859*

2 COMPARE LOAD TO MAXIMUM LOAD CAPACITIES

Calculate the application load (combination of load mass and forces applied to the carrier) and application bending moments (sum of all moments Mx, My, and Mz applied to the carrier). Be sure to evaluate the magnitude of dynamic inertia moments. When a rigidly attached load mass is accelerated or decelerated, its inertia induces bending moments on the carrier. Careful attention to how the load is decelerated at the end of the stroke is required for improved actuator performance and application safety. If either load or any of the moments exceed figures indicated in the Moment and Load Capacity tables (page MXB_12 to 15) for the actuator consider:

1) A higher capacity carrier (ie. S to P)

2) A larger actuator size

3) Auxiliary carrier

4) External guide system (if the load is externally supported and guided, consider using MXB-U)

3 CALCULATE LOAD FACTOR (LF)

For loads with a center of gravity offset from the carrier account for both applied (static) and dynamic loads. The load factor (LF) must not exceed the value of 1.

$$L_F = \frac{Mx}{Mx_{max}} + \frac{My}{My_{max}} + \frac{Mz}{Mz_{max}} + \frac{Fy}{Fy_{max}} + \frac{Fz}{Fz_{max}} \leq 1$$

If LF does exceed the value of 1, consider the four choices listed in step #2.

4 ESTABLISH YOUR MOTION PROFILE AND CALCULATE ACCELERATION RATE

Using the application stroke length and maximum carrier velocity (or time to complete the linear motion), establish the motion profile. Select either triangular (accel-decel) or trapezoidal (accel-constant speed-decel) profile. Now calculate the maximum acceleration and deceleration rates of the move. Acceleration/deceleration should not exceed 1200 in/sec^2 (30.48 m/sec^2). Also, do not exceed safe rates of dynamic inertia moments determined in step #3.

5 SELECT MOTOR (GEARHEAD IF NECESSARY) AND DRIVE

To help select a motor and drive, use the sizing equations located in the Engineering Resources section of the Tolomatic Electric Products Catalog (#3600-4609) to calculate the application thrust and torque requirements. Refer to Motor sections to determine the motor and drive.

6 DETERMINE MOUNTING PLATE REQUIREMENTS

- Consult the Mounting Plate Requirements graph for the model selected (page MXB_11)
- Cross reference the application load and maximum distance between supports
- Select the appropriate number of mounting plates

7 CONSIDER OPTIONS

- Choose metric or inch (U.S. standard) load mounting. When ordering use SK for inch and SM for metric.
- Switches - Reed, Solid State PNP or NPN, all available normally open or normally closed
- FL Floating mount bracket - used when lack of parallelism occurs between the actuator and an externally guided and supported load (available for S Solid bearing style MXB actuators)

8 CONSIDER ORIENTATION

Belt drives used in vertical applications will not prevent a load falling in the event of a timing belt failure. A secondary safety measure is recommended if a MXB is used in a safety critical vertical application.

SPEED FACTOR

FOR APPLICATIONS WITH HIGH SPEED OR SIGNIFICANT SHOCK AND VIBRATION: Calculated values of loads and bending moments must be increased by speed factor from the graph below to obtain full rated life of profiled rail bearing system.

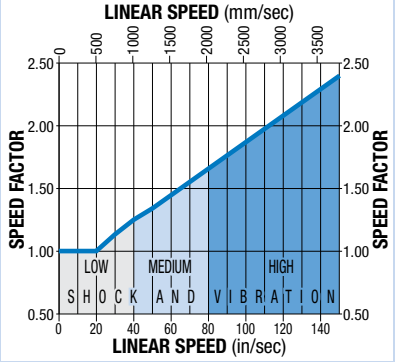

S SOLID BEARING 2:1 RULE

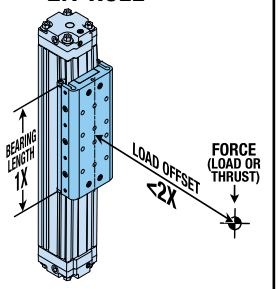

For applications using S solid bearings, binding or interrupted motion may occur if the load offset is equal to or greater than twice the bearing length (1X). *LOAD OFFSET is defined as: the distance from the applied force (or the load center of gravity) to the centerline of the carrier.*

If the load offset cannot be changed consider:

1.) Higher capacity bearing style, i.e. **S to P**

2.) Larger actuator size

3.) Auxiliary carrier

4.) Add external guides

sizeit.tolomatic.com for fast, accurate actuator selection

tolomatic.com/ask Technical support before and after purchase

SERVICE PARTS ORDERING

SWITCHES

Switches for MXB include retained mounting hardware and are the same for all actuator sizes and bearing styles

Code		Lead	Normally	Sensor Type
RY		5m (197 in)	Open	Reed
RK		Quick-disconnect		
NY		5m (197 in)	Closed	Reed
NK		Quick-disconnect		
TY		5m (197 in)	Open	Solid State PNP
TK		Quick-disconnect		
KY		5m (197 in)	Open	Solid State NPN
KK		Quick-disconnect		
PY		5m (197 in)	Closed	Solid State PNP
PK		Quick-disconnect		
HY		5m (197 in)	Closed	Solid State NPN
HK		Quick-disconnect		

NOTE: All switch kits include retained hardware. Quick-disconnect kits include female connector

⚠ NOTE: When ordering switches as service part, Magnet Housing Kit is required if actuator was not originally ordered with switches

To order switch kit use configuration code for switch preceded by SW and actuator code.

EXAMPLE: SWMXB25KK

KIT | ACTUATOR | SIZE | SWITCH CODE

The example is for Solid State NPN, Normally Open Switch with Quick-disconnect couplers. Each switch kit is complete with Bracket, Set Screw, Switch and mating QD cable. Note that the bracket/switch size is common and may be used on any size MXB.

Check out our MX--S carrier adjustment video on the web
https://youtu.be/LVWPg2gfy0A

Select a complete system from tolomatic or add any motion system to Tolomatic's actuators

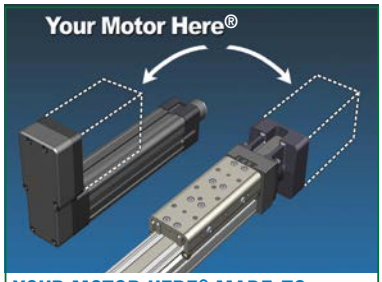

YOUR MOTOR HERE® MADE-TO-ORDER MOTOR MOUNTS.

- Tolomatic will provide a motor-specific interface for nearly any motor.

Visit **www.tolomatic.com/ymh** to find your motor/actuator match!

in Partnership with these manufacturers and others for more options

JVL www.jvl.dk

Nidec CONTROL TECHNIQUES

MXB Rodless Belt Drive Actuators

ORDERING

tolomatic.com/ask
Technical support before and after purchase

MODEL SELECTION (MUST BE IN THIS ORDER)

OPTIONS (IN ANY ORDER)

MXB	40	P	BWS30	SM2007.02	SDB	DC215.9	MP8	HC2	TK2

MODEL
MXB MX Rodless Belt Drive Actuators

SERIES
16 Series actuator
25 Series actuator
32 Series actuator
40 Series actuator
50 Series actuator
63 Series actuator

BEARING
U Unguided Carrier
S Solid Bearing Carrier
P Profiled Rail Bearing Carrier

BELT MATERIAL AND WIDTH
BWS10 10 mm Urethane Steel (MXB16)
BWS18 18 mm Urethane Steel (MXB25)
BWS25 25 mm Urethane Steel (MXB32)
BWS30 30 mm Urethane Steel (MXB40)
BWS40 40 mm Urethane Steel (MXB50)
BWS50 50 mm Urethane Steel (MXB63)

STROKE LENGTH & MOUNTING TYPE
SK_ _ _ _._ _ _ Stroke, enter desired stroke length in **inches**

SM†_ _ _ _._ _ _ Stroke, enter desired stroke length in **millimeters**

GPB Blank Plate (MXB-U only)
NO MOUNTING HOLES allowing user to drill and tap as needed

NOTE: Actuator mounting threads and mounting fasteners will be either inch or metric, depending on how stroke length is indicated

SK=inch mounting

SM= metric mounting

† The metric version provides metric tapped holes for mounting of the load to the carrier and of the actuator to mounting surfaces

U & S MOTOR MOUNTING/REDUCTION
(must choose one)

SDL, SDLD* Direct Drive on Left
SDR, SDRD* Direct Drive on Right

⚠ A motor size and code must be selected when specifying a 3:1 reduction. (2:1 reduction on MXB16)

SDTL, SDTLD* 3:1 Reduction on Top Left
SDTR, SDTRD* 3:1 Reduction on Top Right
SDBL, SDBLD* 3:1 Reduction on Left Bottom
SDBR, SDBRD* 3:1 Reduction on Right Bottom

***For Dual Stub Shaft Option**

P MOTOR MOUNTING / REDUCTION
(must choose one)

SDT, SDTD* Direct Drive on Top
SDB, SDBD* Direct Drive on Bottom

⚠ A motor size and code must be selected when specifying a 3:1 reduction. (2:1 reduction on MXB16)

SDLT, SDLTD* 3:1 Reduction on Left Top
SDRT, SDRTD* 3:1 Reduction on Right Top
SDLB, SDLBD* 3:1 Reduction on Left Bottom
SDRB, SDRBD* 3:1 Reduction on Right Bottom

***For Dual Stub Shaft Option**

AUXILIARY CARRIER
DC_ _ _._ _ _ Auxiliary Carrier, (MXB-P only) enter center-to-center spacing desired in **inches** (SK) or **millimeters** (SM)

(Same unit of measure as stroke length is required)

⚠ **Center-to-center spacing between carriers adds to overall length of the actuator,** this distance will not be subtracted from stroke length specified in the previous step

HEAD COVER PLATES
HC2 Head Cover Plates

MOUNTING
MP_ Mounting Plates, & quantity
TC_ Tube Clamps, & quantity
NOTE: The MXB requires Mounting Plates to allow clearance for motor when mounted flush to surface.
16,25,32 *sizes use T-Nuts with Mounting Plates.*
40,50,63 *sizes use Tube Clamps with Mounting Plates.*

P CARRIER ORIENTATION
BIR Mirrored Carrier Design

MOTOR / DRIVE / CONTROLLER / PLANETARY GEARBOX
⚠ Reference the ordering pages in Tolomatic Electric Product Brochures Stepper Products Brochure #3600-4160 & Planetary Gearbox Doc. #3600-4161

SWITCHES

TYPE	LOGIC	NORMALLY	QUICK-DISCONNECT	CODE	QUANTITY	LEAD LENGTH
REED	SPST	Open	no	RY	After code enter quantity desired	5 meters (16.4 feet)
			QD	RK		
		Closed	no	NY		
			QD	NK		
SOLID STATE	PNP	Open	no	TY		
			QD	TK		
	NPN	Open	no	KY		
			QD	KK		
	PNP	Closed	no	PY		
			QD	PK		
	NPN	Closed	no	HY		
			QD	HK		

NOTE: Brakes mounted on reduction drives (especially in vertically positioned actuators) will not prevent back driving of the screw and the load falling under gravity in the event of a timing belt failure. An inline motor mount with a fail-safe brake mounted directly to the actuator shaft or a special geared or thru-shaft reduction drive construction should be considered if a brake is required in a safety critical application. Contact Tolomatic for alternative reduction drive brake mounting options.

Gearheads may be used with reduction drives. However, the torque on the belt and internal reduction drive components must remain below the capabilities of the assembly to prevent belt slipping or premature failure. Contact Tolomatic for additional information if required.

⚠ **Not all codes listed are compatible with all options.**

Call Tolomatic 1-800-328-2174 to determine available options and accessories based on your application requirements.

Tolomatic™

Linear Motion Solutions

ELECTRIC LINEAR ACTUATORS

Rod -Screw-Drive
Rodless Belt-Drive



SERVO LINEAR ACTUATORS

Rod-Style Integrated Motor
ServoWeld



PNEUMATIC LINEAR ACTUATORS

Rodless Band Cylinders
Cable Cylinders



POWER TRANSMISSION

Right Angle Gearboxes
Industrial Caliper Disc Brakes

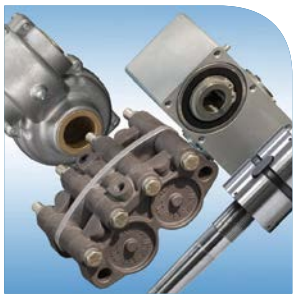

USA – Headquarters

Tolomatic, Inc.
Hamel MN 55340 USA

763-478-8000
1-800-328-2174
sales@tolomatic.com

tolomatic.com

MÉXICO

Service Center
Querétaro, Mexico
El Marqués, México

+1 (763) 478-8000
help@tolomatic.com

EUROPE

Tolomatic Europe GmbH
Rüsselsheim, Germany

+49 6142 17604-0
help@tolomatic.eu

tolomatic.com/de

CHINA

Tolomatic Automation Products (Suzhou) Co. Ltd.
Suzhou, Jiangsu, China

+86 512 6750 8506
TolomaticChina@tolomatic.com

tolomatic.cn

Learn More About Tolomatic

©2026. All brand and product names are trademarks of their respective owners. Information in this document is believed accurate at time of printing. However, Tolomatic assumes no responsibility for its use or for any errors that may appear in this document. Tolomatic reserves the right to change the design or operation of the equipment described herein and any associated motion products without notice. Information in this document is subject to change without notice.

Visit www.tolomatic.com for the most up-to-date technical information.