Discontinued H/ME20 Caliper Disc Brakes:

Hydraulic/Mechanical Dual Function Caliper Disc Brake

HME20 Series

Model Numbers:

0755–0200	0755–0240	0755–0300	0755–0340	0755–0500	0755–0540	0755–0600	0755–0640
0755–0210	0755–0260	0755–0310	0755–0360	0755–0510	0755–0560	0755–0610	0755–0660
0755–0230	0755–0270	0755–0330	0755–0370	0755–0530	0755–0570	0755–0630	0755–0670

HYDRAULIC / MECHANICAL BRAKES

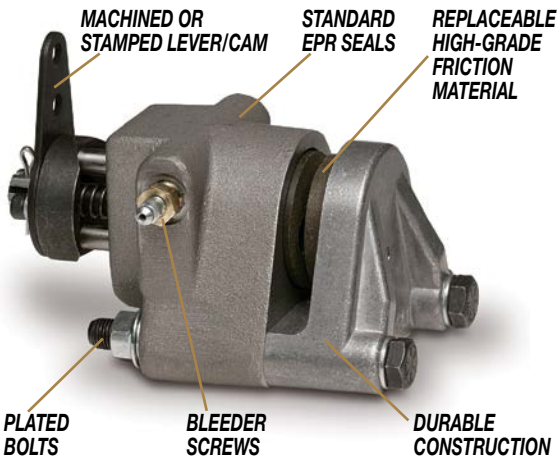

These Tolomatic brakes combine hydraulic and mechanical braking in one caliper. Available in the H/ME20 Series and H/ME220 Series these single acting calipers deliver high braking torque in a small package. Features include: replaceable, high-grade friction material, standard EPR seals, aluminum or cast iron construction (depending on model), bleeder screws and zinc plated bolts. Options include Buna-N seals,Viton® seals and floating brackets. (See pages 50 to 55)

Caliper Disc Brakes

ORDER ONLINE

H/ME20 SERIES - ALUMINUM

AVAILABLE STYLES

"L" Long Lever (3.50") Single Acting

FIXED MOUNT - FLOATING DISC



PICTURED: 0755-0360

"L" Long Lever (3.50") Single Acting with Floating Bracket

FLOATING MOUNT - FIXED DISC



PICTURED: 0755-0260

"M" Machined Cam Lever (1.75") Single Acting

FIXED MOUNT - FLOATING DISC



PICTURED: 0755-0300

"M" Machined Cam Lever (1.75") Single Acting with Floating Bracket

FLOATING MOUNT - FIXED DISC



PICTURED: 0755-0200

"S" Short Lever (1.75") Single Acting

FIXED MOUNT - FLOATING DISC



PICTURED: 0755-0330

"S" Short Lever (1.75") Single Acting with Floating Bracket

FLOATING MOUNT - FIXED DISC



PICTURED: 0755-0230

H/ME20 SPECIFICATIONS

Maximum Hydraulic Pressure Rating:	1,000 PSI
Maximum lever force "L" Long Lever:	225 Lbs.
Maximum lever force "M" & "S" Levers:	450 Lbs.
Accommodates Tolomatic disc diameters:	6-5/16", 8", 10", 12", 16"
Maximum disc diameter:	none
Housing Material:	Cast aluminum
Bolts:	Zinc plated grade 5
Seals:	EPR Standard
Wearable friction material:	0.8 in^3
Friction material:	Replaceable, high-grade
Total lining area:	3.75 in^2
Piston diameter:	1.625 in.
Fluid displacement, non-retractable:	Single acting = 0.062 in^3

OPTIONS

Seals:	Buna-N seals
Floating bracket:	Stamped steel construction

MOUNTING DIMENSIONS

Disc Diameter		6.313"	8"	10"	12"	16"
	D	3.531"	4.375"	5.375"	6.375"	8.375"
Braking Radius	**E**	2.281"	3.125"	4.125"	5.125"	7.125"

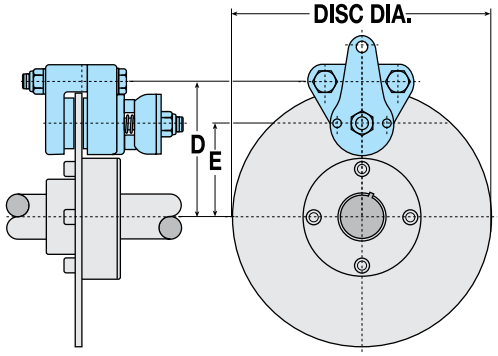

DISC SIZING EQUATIONS

HYDRAULIC:

DYNAMIC TORQUE (IN.-LBS.) = 1.44 x BRAKING RADIUS (IN.) x PRESSURE (PSI)
STATIC (PARKING) TORQUE (IN.-LBS.) = 0.72 x BRAKING RADIUS (IN.) x PRESSURE (PSI)

"L" LONG LEVER (3.50"):

DYNAMIC TORQUE (IN.-LBS.) = 5.38 x BRAKING RADIUS (IN.) x LEVER FORCE (LBS.)
STATIC (PARKING) TORQUE (IN.-LBS.) = 2.69 x BRAKING RADIUS (IN.) x LEVER FORCE (LBS.)

"M" MACHINED CAM (1.75") & "S" SHORT LEVER (1.75"):

DYNAMIC TORQUE (IN.-LBS.) = 2.69 x BRAKING RADIUS (IN.) x LEVER FORCE (LBS.)
STATIC (PARKING) TORQUE (IN.-LBS.) = 1.345 x BRAKING RADIUS (IN.) x LEVER FORCE (LBS.)

BRAKING RADIUS (IN.) = [DISC DIAMETER ÷ 2] - 0.875
NOTE: Braking Radius values are listed under "Mounting Dimensions" above

PERFORMANCE DATA

Hydraulic - Dynamic Torque vs Pressure

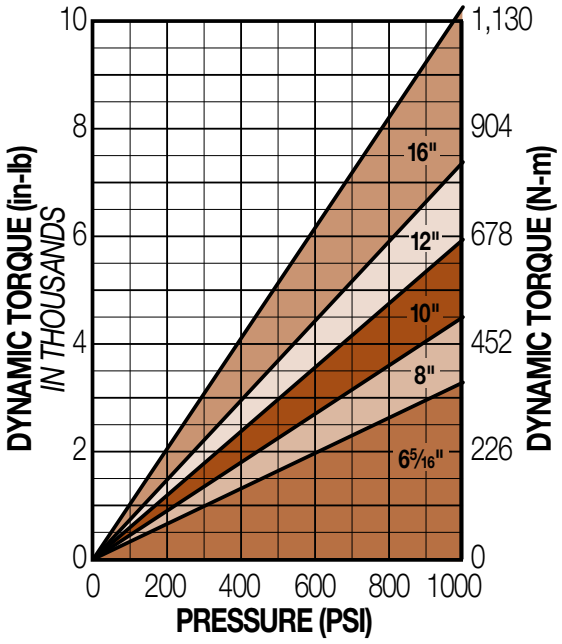

Mechanical - Dynamic Torque vs Lever Force

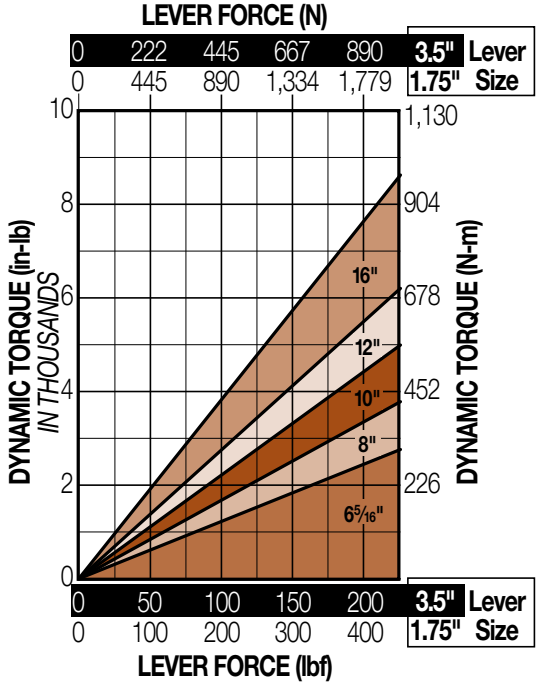

Hydraulic - Static Torque vs Pressure

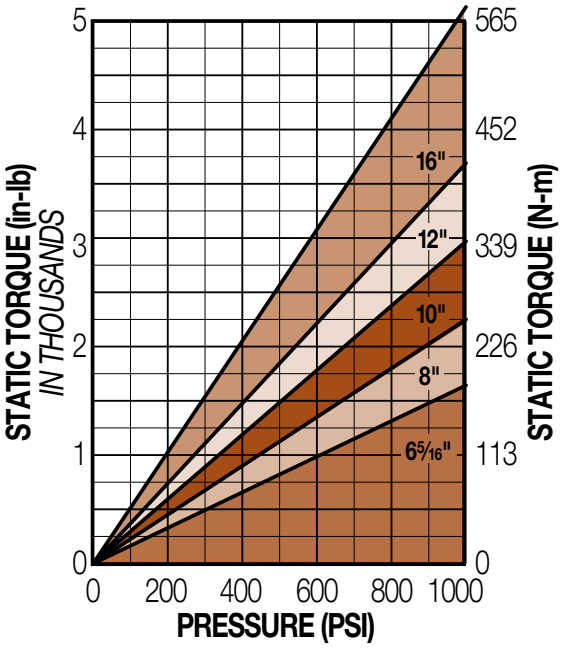

Mechanical - Static Torque vs Lever Force

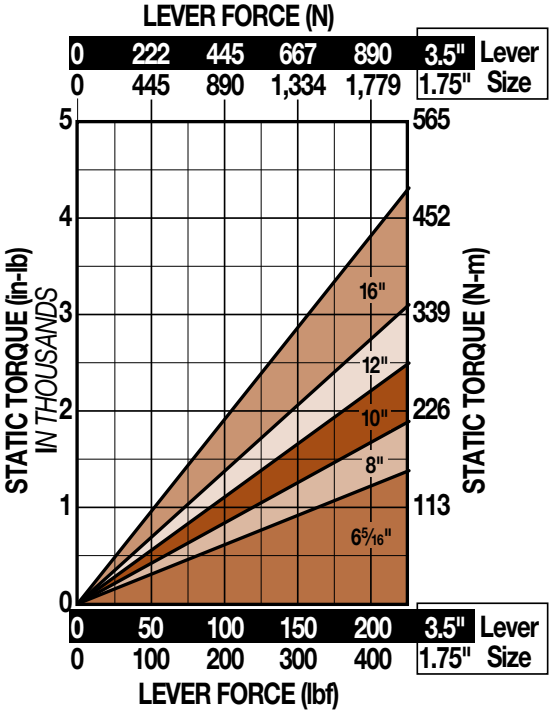

Caliper Disc Brakes

ORDER ONLINE

H/ME20 SERIES - ALUMINUM

"L" LONG LEVER - SINGLE ACTING

FIXED MOUNT - FLOATING DISC

Accommodates disc thickness: 5/32" 1/4"

Weight 1.5 lbs. .68 kgs.

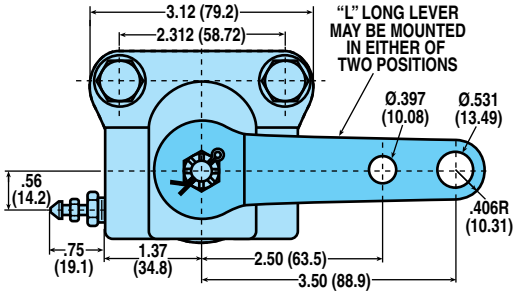

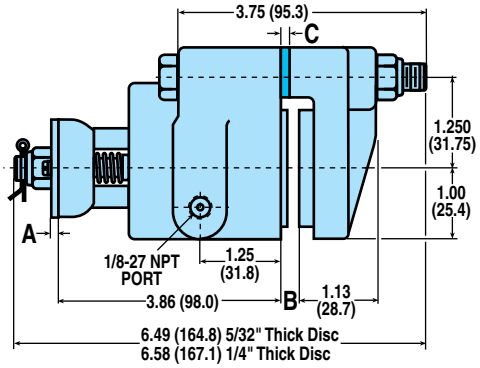

MODEL CODE	DISC THK.	A	B	C	OPTIONS / DESCRIPTION	ASSEMBLY NUMBER
H/ME20LAC	5/32"	.164"	.25"	–	Long Lever, Buna-N Seals	0755-0360
H/ME20LACG	5/32"	.164"	.25"	–	Long Lever	0755-0660
H/ME20LBC	1/4"	.164"	.34"	.094"	Long Lever, Buna-N Seals	0755-0370
H/ME20LBCG	1/4"	.164"	.34"	.094"	Long Lever	0755-0670

"L" LONG LEVER - SINGLE ACTING WITH FLOATING BRACKET

FLOATING MOUNT - FIXED DISC

Accommodates disc thickness: 5/32" 1/4"

Weight 2.25 lbs. 1.02 kgs.

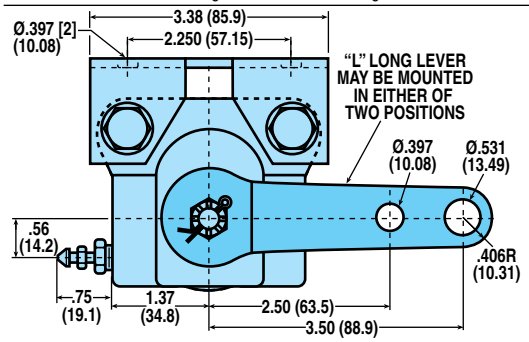

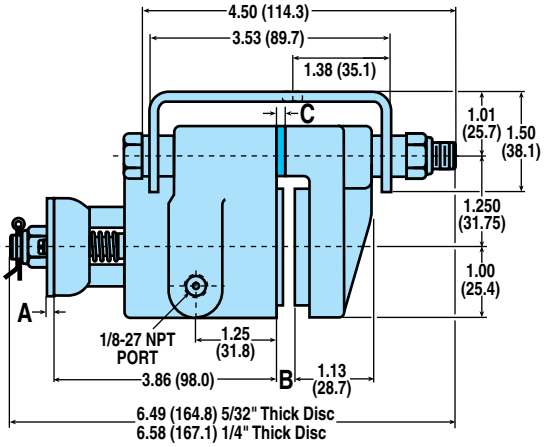

MODEL CODE	DISC THK.	A	B	C	OPTIONS / DESCRIPTION	ASSEMBLY NUMBER
H/ME20LAFC	5/32"	.164"	.25"	–	Long Lever, Fltng Brkt, Buna-N	0755-0260
H/ME20LAFCG	5/32"	.164"	.25"	–	Long Lever, Fltng Brkt	0755-0560
H/ME20LBFC	1/4"	.164"	.34"	.094"	Long Lever, Fltng Brkt, Buna-N	0755-0270
H/ME20LBFCG	1/4"	.164"	.34"	.094"	Long Lever, Fltng Brkt,	0755-0570

CAM TRAVEL DATA

1. 15° maximum travel when linings are new and with 1/32" gap each side of disc.
2. Periodic tightening of lock nut will reduce travel of lever and will allow 1/4" wear on each lining.
3. 90° maximum travel after 3/16" wear on each lining without intermediate tightening of lock nut.

BRAKE MODEL LETTER CODES

A 5/32" Thick Disc	**G** EPR Seals	**ME** Mechanical Brake
B 1/4" Thick Disc	**H** Hydraulic Brake	**S** Short Lever (ME Brakes)
C With Bleeder Fitting	**L** Long Lever (ME Brakes)	
F Floating Bracket Mount	**M** Machined Cam (ME Brakes)	

H/ME20 SERIES - ALUMINUM

"M" MACHINED CAM - SINGLE ACTING

FIXED MOUNT - FLOATING DISC

Accommodates disc thickness: 5/32" 1/4"

Weight 1.5 lbs. .68 kgs.

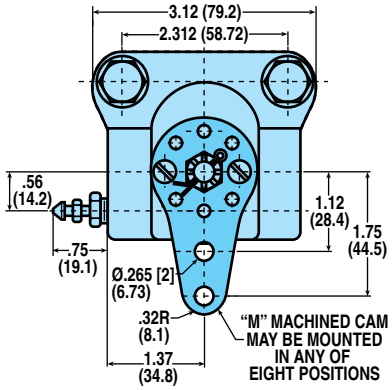

See "L" LONG LEVER SINGLE ACTING dimensional drawing for additional measurements

MODEL CODE	DISC THK.	A	B	C	OPTIONS / DESCRIPTION	ASSEMBLY NUMBER
H/ME20MAC	5/32"	.105"	.25"	–	Machined Cam, Buna-N Seals	0755-0300
H/ME20MACG	5/32"	.105"	.25"	–	Machined Cam	0755-0600
H/ME20MBC	1/4"	.105"	.34"	.094"	Machined Cam, Buna-N Seals	0755-0310
H/ME20MBCG	1/4"	.105"	.34"	.094"	Machined Cam	0755-0610

"S" SHORT LEVER - SINGLE ACTING

FIXED MOUNT - FLOATING DISC

Accommodates disc thickness: 5/32" 1/4"

Weight 1.5 lbs. .68 kgs.

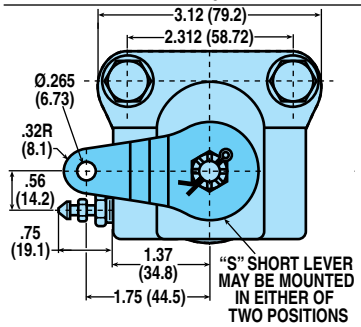

See "L" LONG LEVER SINGLE ACTING dimensional drawing for additional measurements

MODEL CODE	DISC THK.	A	B	C	OPTIONS / DESCRIPTION	ASSEMBLY NUMBER
H/ME20SAC	5/32"	.164"	.25"	–	Short Lever, Buna-N Seals	0755-0330
H/ME20SACG	5/32"	.164"	.25"	–	Short Lever	0755-0630
H/ME20SBC	1/4"	.164"	.34"	.094"	Short Lever, Buna-N Seals	0755-0340
H/ME20SBCG	1/4"	.164"	.34"	.094"	Short Lever	0755-0640

"M" MACHINED CAM - SINGLE ACTING WITH FLOATING BRACKET

FLOATING MOUNT - FIXED DISC

Accommodates disc thickness: 5/32" 1/4"

Weight 2.25 lbs. 1.02 kgs.

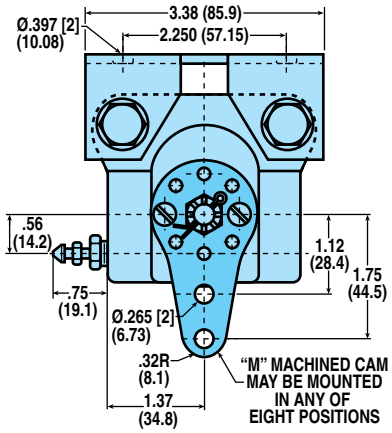

See "L" LONG LEVER SINGLE ACTING WITH FLOATING BRACKET dimensional drawing for additional measurements

MODEL CODE	DISC THK.	A	B	C	OPTIONS / DESCRIPTION	ASSEMBLY NUMBER
H/ME20MAFC	5/32"	.105"	.25"	–	Mach Cam, Fltng Brkt, Buna-N	0755-0200
H/ME20MAFCG	5/32"	.105"	.25"	–	Mach Cam, Fltng Brkt	0755-0500
H/ME20MBFC	1/4"	.105"	.34"	.094"	Mach Cam, Fltng Brkt, Buna-N	0755-0210
H/ME20MBFCG	1/4"	.105"	.34"	.094"	Mach Cam, Fltng Brkt	0755-0510

"S" SHORT LEVER - SINGLE ACTING WITH FLOATING BRACKET

FLOATING MOUNT - FIXED DISC

Accommodates disc thickness: 5/32" 1/4"

Weight 2.25 lbs. 1.02 kgs.

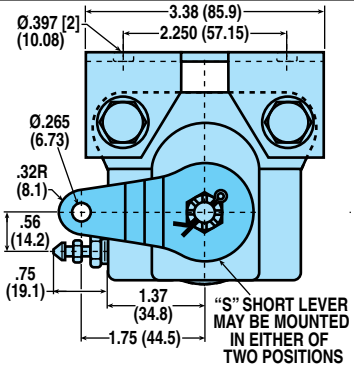

See "L" LONG LEVER SINGLE ACTING WITH FLOATING BRACKET dimensional drawing for additional measurements

MODEL CODE	DISC THK.	A	B	C	OPTIONS / DESCRIPTION	ASSEMBLY NUMBER
H/ME20SAFC	5/32"	.164"	.25"	–	Short Lever, Fltng Brkt, Buna-N	0755-0230
H/ME20SAFCG	5/32"	.164"	.25"	–	Short Lever, Fltng Brkt	0755-0530
H/ME20SBFC	1/4"	.164"	.34"	.094"	Short Lever, Fltng Brkt, Buna-N	0755-0240
H/ME20SBFCG	1/4"	.164"	.34"	.094"	Short Lever, Fltng Brkt	0755-0540